CONSTRUCTION PLANS FOR

MEMPHIS INTERNATIONAL AIRPORT

MEMPHIS, TENNESSEE

OWNER / SPONSOR

MEMPHIS-SHELBY COUNTY AIRPORT AUTHORITY

TAXIWAY BRAVO RECONFIGURATION (HOT SPOT 1)

MSCAA PROJECT NUMBER 18-1413-02
ENGINEER'S FILE NUMBER 72198-B

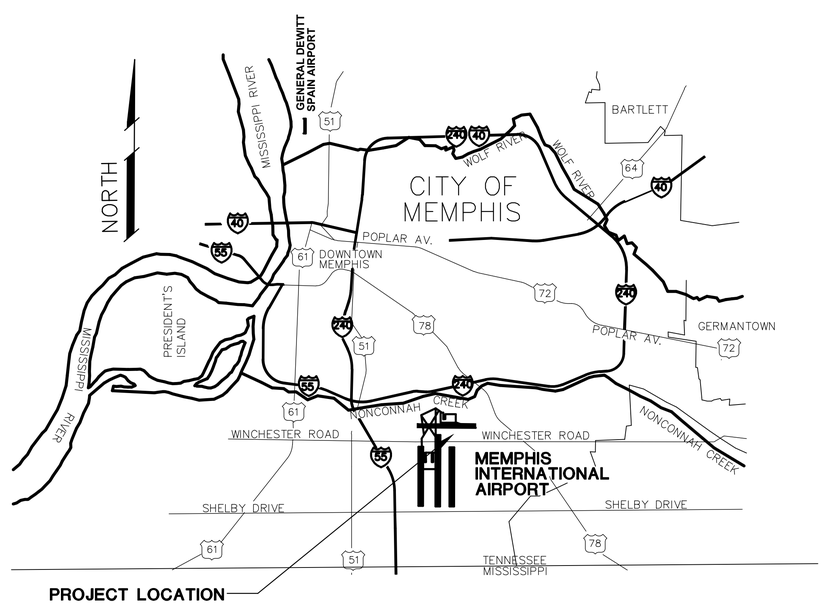

VICINITY MAP

MEMPHIS INTERNATIONAL AIRPORT
2491 WINCHESTER RD. SUITE 113
MEMPHIS, TENNESSEE
38116-3856

PROGRAM MANAGER
PARSONS
Program Management Consultant
Parsons Transportation Group Inc.
Project Office:
4225 Airways Blvd.
Memphis TN, 38116
JOB NO.

Allen&Hoshall
engineers-architects-surveyors
1661 INTERNATIONAL DRIVE
SUITE 100
MEMPHIS, TENNESSEE 38120
PHONE: 901-820-0820
FAX: 901-683-1001
JOB NO. 72198-B

ENGINEER-SUBCONSULTANT
POWERS HILL DESIGN
CIVIL ENGINEERING. CIVIL RESPONSIBILITY.
80 Monroe Avenue
Suite 420
Memphis, TN 38103
Tel: 901.543.8000
JOB NO.

DRAWN BY: RNP
CHECKED BY: HP
APPROVED BY: TG

WILLIAM T. GIBSON
REGISTERED ENGINEER
AGRICULTURE
No. 104251
STATE OF TENNESSEE
3/13/25

ISSUED FOR BID

NO.	DESCRIPTION	DATE	BY

REVISIONS

PROJECT:
TAXIWAY BRAVO RECONFIGURATION (HOT SPOT 1)

SHEET TITLE:
COVER SHEET

MSCAA NO. 18-1413-02
DWG. FILE NAME G-CS-01.DWG
DATE 03/17/2025
DWG NO. G-CS-01
SCALE
FACILITY NO. NONE
SHEET NO. 1 of 73

INDEX of DRAWINGS

INDEX of DRAWINGS

MEMPHIS - SHELBY COUNTY AIRPORT AUTHORITY

MEMPHIS INTERNATIONAL AIRPORT
2491 WINCHESTER RD. SUITE 113
MEMPHIS, TENNESSEE
38116-3856

PROGRAM MANAGER
PARSONS
Program Management Consultant
Parsons Transportation Group Inc.
Project Office:
4225 Airways Blvd.
Memphis TN, 38116
JOB NO.

Allen&Hoshall
engineers-architects-surveyors
1661 INTERNATIONAL DRIVE
SUITE 100
MEMPHIS, TENNESSEE 38120
PHONE: 901-820-0820
FAX: 901-683-1001
JOB NO. 72198-B

ENGINEER-SUBCONSULTANT
POWERS HILL DESIGN
CIVIL ENGINEERING. CIVIL RESPONSIBILITY.
80 Monroe Avenue
Suite 420
Memphis, TN 38103
Tel: 901.543.8000
JOB NO.

DRAWN BY: RNP
CHECKED BY: HP
APPROVED BY: TG

WILLIAM T. GIBSON
REGISTERED ENGINEER
AGRICULTURE
No. 104251
STATE OF TENNESSEE
3/13/25

ISSUED FOR BID

NO.	DESCRIPTION	DATE	BY

REVISIONS

PROJECT:

TAXIWAY BRAVO RECONFIGURATION (HOT SPOT 1)

SHEET TITLE:

INDEX OF DRAWINGS

MSCAA NO. 18-1413-02
DWG. FILE NAME G-ID-02.DWG
DATE 03/17/2025
DWG NO. G-ID-02
SCALE
SHEET NO. 2 of 73
FACILITY NO. NONE

GENERAL SYMBOL LEGEND FOR EXISTING CONDITIONS

- ELEVATION BENCHMARK
- STORM DRAIN GRATE
- STORM WATER MANHOLE (SWMH)
- SANITARY SEWER MANHOLE (SSMH)
- ELECTRICAL JUNCTION BOX
- UNDERDRAIN CLEANOUT
- LIGHT
- POWER POLE
- SOIL BORING
- GUY LINE
- TELEPHONE MANHOLE
- GAS VALVE
- WATER VALVE
- FIRE HYDRANT
- SIGN
- MANHOLE OTHER
- REFLECTOR

OHE	OVERHEAD ELECTRIC LINE
UGE	BURIED ELECTRIC LINE
GAS	GAS LINE
W	WATER LINE
CATV	CABLE TV
T	TELEPHONE
	STORM DRAIN
X	FENCE
224	CONTOUR (ONE-FOOT INTERVALS)
225	CONTOUR (5-FOOT INTERVALS)
FO	FIBER OPTIC CABLE
BCE	BURIED CABLE ELECTRIC
F	UNDERGROUND FUEL LINE
TSA	TAXIWAY SAFETY AREA
RSA	RUNWAY SAFETY AREA

ABBREVIATIONS

ABC	AGGREGATE BASE COURSE
ACI	AMERICAN CONCRETE INSTITUTE
AC	ASPHALT CEMENT OR ADVISORY CIRCULAR
ACHM	ASPHALTIC CONCRETE HOT MIX
AD	ALGEBRAIC DIFFERENCE
ADG	AIRPLANE DESIGN GROUP
AGG	AGGREGATE
AGL	ABOVE GROUND LEVEL
AIP	AIRPORT IMPROVEMENT PROGRAM
ABIP	ABANDON IN PLACE
ALP	AIRPORT LAYOUT PLAN
ALS	APPROACH LIGHTING SYSTEM
ALT	ALTERNATE
AOA	AIR OPERATIONS AREA
AP	AIRPORT CONTROL POINT
ARC	AIRPORT REFERENCE CODE
APPROX	APPROXIMATELY
ARCP	ARCH REINFORCED CONCRETE PIPE
ARFF	AIRPORT RESCUE AND FIRE FIGHTING
ARP	AIRPORT REFERENCE POINT
ASBS	ASPHALT STABILIZED DRAINAGE LAYER
ASPH	ASPHALT
ASTM	AMERICAN SOCIETY FOR TESTING AND MATERIALS
ASW	AIRPORTS SOUTHWEST
ATC	AIR TRAFFIC CONTROL
ATCT	AIRPORT TRAFFIC CONTROL TOWER
AVN	AVIATION
AZ	AZIMUTH
BK	BACK
BM	BENCH MARK
BRL	BUILDING RESTRICTION LINE
BS	BASE SLAB
BVCE	BEGIN VERTICAL CURVE ELEVATION
BVCS	BEGIN VERTICAL CURVE STATION
CAT	CATEGORY
CCM	CONCRETE CABLE MARKER
CFR	CRASH, FIRE, AND RESCUE
CIP	CAST IN PLACE
COFA	CONSTRUCTION OBJECT FREE AREA
COFR	CODE OF FEDERAL REGULATIONS
CONC	CONCRETE
CFS	CUBIC FEET PER SECOND
CIP	CAPITOL IMPROVEMENT PROGRAM
CO	CLEAN-OUT
℄	CENTERLINE
CLR	CLEAR
CMP	CORRUGATED METAL PIPE
CP	CONTROL POINT
CONST.	CONSTRUCTION
CRSI	CONCRETE REINFORCING STEEL INSTITUTE
CTB	CEMENT TREATED BASE
CTRD	CENTERED
CY	CUBIC YARDS
DEB	DIRECT EARTH BURIED
DIA	DIAMETER
DIP	DUCTILE IRON PIPE
DIST	DISTRIBUTION
DOT	DEPARTMENT OF TRANSPORTATION
DIA	DIAMETER
DIP	DUCTILE IRON PIPE
DP	DRAINAGE PIPE
DS	DRAINAGE STRUCTURE
DWG	DRAWING
EA	EACH
EBOX	ELECTRICAL BOX
ELEV	ELEVATION
ELEC	ELECTRICAL
EOP	EDGE OF PAVEMENT
ERCP	ELLIPTICAL REINFORCED CONCRETE PIPE
EVCE	END VERTICAL CURVE ELEVATION
EVCS	END VERTICAL CURVE STATION
EX.	EXISTING
EXIST	EXISTING
FAA	FEDERAL AVIATION ADMINISTRATION
FAR	FEDERAL AVIATION REGULATIONS
FBO	FIXED BASE OPERATOR
FED	FEDERAL
FES	FLARED END SECTION
FH	FIRE HYDRANT
FIS	FEDERAL INSPECTION SERVICE
FL	FLOWLINE
FM	FORCE MAIN
FOC	FIBER OPTIC CABLE
FPS	FEET PER SECOND
FSS	FLIGHT SERVICE STATION
FT	FOOT
FTG	FITTING
GA	GAUGE
GALV	GALVANIZED
GPS	GLOBAL POSITIONING SYSTEM
GS	GLIDE SLOPE
HDPE	HIGH DENSITY POLYETHYLENE
HIRL	HIGH INTENSITY RUNWAY LIGHTS
HMA	HOT MIX ASPHALT
HOR	HORIZONTAL
HW	HEADWALL
ID	INSIDE DIAMETER
IE	INVERT ELEVATION
IG	IRON GRATE
ILS	INSTRUMENT LANDING SYSTEM
IM	INNER MARKER
IR	IRON ROD
JT	JOINT
JUNC	JUNCTION
L	LEFT
LAHSO	LAND AND HOLD SHORT OPERATIONS
LBS	POUNDS
LF	LINEAR FEET
LOC	LOCALIZER
LP	LIGHT POLE
LT	LEFT
MALS	MEDIUM INTENSITY APPROACH LIGHTING SYSTEM
MALSF	MEDIUM INTENSITY APPROACH LIGHTING SYSTEM WITH SEQUENCED FLASHERS
MALSR	MEDIUM INTENSITY APPROACH LIGHTING SYSTEM WITH RUNWAY ALIGNMENT INDICATOR LIGHTS
MAX	MAXIMUM
MFNR	MANUFACTURER
MIN	MINIMUM
MJ	MECHANICAL JOINT
MH	MANHOLE
MIA	MEMPHIS INTERNATIONAL AIRPORT
MLG&W	MEMPHIS LIGHT GAS & WATER
MM	MIDDLE MARKER
MPH	MILES PER HOUR
MSCAA	MEMPHIS-SHELBY COUNTY AIRPORT AUTHORITY
NAD	NORTH AMERICAN VERTICAL DATUM
NAVAID	NAVIGATIONAL AID
NEC	NATIONAL ELECTRIC CODE
NEMA	NATIONAL ELECTRICAL MANUFACTURES ASSOCIATION
NDP	NO DIRECT PAY
NFPA	NATIONAL FIRE PROTECTION ASSOCIATION
NIC	NOT IN CONTRACT
NO	NUMBER
NOTAM	NOTICE TO AIRMEN
NP	NON-PERFORATED
N.T.S.	NOT TO SCALE
NUM	NUMBER
OFA	OBJECT FREE AREA
OSHA	OCCUPATIONAL SAFETY AND HEALTH ADMINISTRATION
O.C.	ON CENTER
O.D.	OUTSIDE DIAMETER
OZ	OUNCE
PAV'T	PAVEMENT
PAPI	PRECISION APROACH PATH INDICATOR
PC	POINT OF CURVATURE
PCC	PORTLAND CEMENT CONCRETE OR POINT OF COMPOUND CURVE
PED	PEDISTAL
PGL	PROPOSED GRADE LINE
PI	POINT OF INTERSECTION
PL	PROPERTY LINE
PLI	PLASTICITY INDEX
PP	POWER POLE
PSF	POUNDS PER SQUARE FOOT
PR	PROPOSED
PROP	PROPOSED
PSI	POUNDS PER SQUARE INCH
PT	POINT OF TANGENCY
PVC	POLYVINYLCHLORIDE
PVI	POINT OF VERTICAL CURVATURE
PVMT	PAVEMENT
R	RIGHT
RCBC	REINFORCED CONCRETE BOX CULVERT
RCP	REINFORCED CONCRETE PIPE
RGRCP	RUBBER GASKET REINFORCED CONCRETE PIPE
ROFA	RUNWAY OBJECT FREE AREA
RP	RADIUS POINT
RSA	RUNWAY SAFETY AREA
RT	RIGHT
RVR	RUNWAY VISUAL RANGE
RW	RUNWAY
R/W	RUNWAY
SCH	SCHEDULE
SCB	SOIL CEMENT BASE
SD	STORM DRAIN
SECT	SECTION
SHT	SHEET
SF	SILT FENCE
SQ.FT.	SQUARE FOOT
SI	SURFACE INLET
SPEC	SPECIFICATIONS
SS	SANITARY SEWER
SSMH	SANITARY SEWER MANHOLE
SY	SQUARE YARD
STA	STATION
SWMH	STORM WATER MANHOLE
SWY	STOPWAY
SQ	SQUARE
TBM	TEMPORARY BENCH MARK
TC	TOP OF CURB
TDZ	TOUCH DOWN ZONE
TERPS	TERMINAL INSTRUMENT PROCEDURES
TH	TEST HOLE
THH	THRESHOLD
THK	THICK
TSA	TAXIWAY SAFETY AREA
TL	TAXILANE
TW	TAXIWAY
TYP	TYPICAL
UGP	UNDERGROUND PIPE
UGE	UNDER GROUND ELECTRIC
UL	UNDERWRITERS LABORATORY
UD	UNDERDRAIN
USGS	UNITED STATES GEOLOGICAL SERVICE
VERT	VERTICAL
VC	VERTICAL CURVE
VFR	VISUAL FLIGHT RULE
WWF	WELDED WIRE FABRIC

MEMPHIS - SHELBY COUNTY AIRPORT AUTHORITY

MEMPHIS INTERNATIONAL AIRPORT
2491 WINCHESTER RD. SUITE 113
MEMPHIS, TENNESSEE
38116-3856

PROGRAM MANAGER
PARSONS
Program Management Consultant
Parsons Transportation Group Inc.
Project Office:
4225 Airways Blvd.
Memphis TN, 38116
JOB NO.

Allen&Hoshall
engineers-architects-surveyors
1661 INTERNATIONAL DRIVE
SUITE 100
MEMPHIS, TENNESSEE 38120
PHONE: 901-820-0820
FAX: 901-683-1001
JOB NO. 72198-B

ENGINEER-SUBCONSULTANT
POWERS HILL DESIGN
CIVIL ENGINEERING. CIVIL RESPONSIBILITY.
80 Monroe Avenue
Suite 420
Memphis, TN 38103
Tel: 901.543.8000
JOB NO.

DRAWN BY: RNP
CHECKED BY: HP
APPROVED BY: TG

WILLIAM T. GIBSON
REGISTERED ENGINEER
AGRICULTURE
No. 104251
STATE OF TENNESSEE
3/17/25

ISSUED FOR BID

NO.	DESCRIPTION	DATE	BY

REVISIONS

PROJECT:
TAXIWAY BRAVO RECONFIGURATION (HOT SPOT 1)

SHEET TITLE:
SYMBOLS LEGEND AND ABBREVIATIONS

MSCAA NO. 18-1413-02
DWG. FILE NAME G-ID-03.DWG
DATE 03/17/2025
DWG NO. G-ID-03
SCALE
FACILITY NO. NONE
SHEET NO. 3 of 73

SUMMARY OF QUANTITIES

FAA SPEC NO.	DESCRIPTION	UNIT	QUANTITY	FINAL
SC-30-1	AIRFIELD PAVEMENT REPAIR	ALLOW	1	
S-100-6.1	PLASTIC SAFETY FENCE	LF	8,214	
S-100-6.2	GUARD HOUSE (CONTRACTOR FURNISHED)	EA	1	
S-100-6.4	CURING FACILITIES	LS	1	
S-100-6.5	CROSSING GATE ARM (CONTRACTOR FURNISHED)	EA	1	
S-100-6.6	TRAFFIC CONTROL	LS	1	
S-100-6.7	PROJECT SAFETY & SECURITY	LS	1	
C-102-5.1	SILT FENCE	LF	6,348	
C-102-5.2	CATCH BASIN SEDIMENT TRAP	EA	4	
C-102-5.3	FILTER SOCK CHECK DAM	EA	6	
C-102-5.4	INLET PROTECTION	EA	2	
C-102-5.5	CONSTRUCTION ENTRANCES	EA.	2	
C-105-6.1	MOBILIZATION	LS	1	
C-105-6.2	DEMOBILIZATION	ALLOW	1	
P-101-5.01	MISCELLANEOUS DEMOLITION	LS	1	
P-101-5.02	REMOVE EXISTING LIGHT & TRANSFORMER AND INSTALL BLANK COVERPLATE OVER EXISTING BASE CAN	EA	73	
P-101-5.03	REMOVE EXISTING LIGHT FIXTURE AND TRANSFORMER (FLUSH MOUNTED)	EA	156	
P-101-5.04	DEMOLITION OF ELECTRICAL HANDHOLE	EA	1	
P-101-5.06	REMOVE AND STORE LIGHTED SIGN WITH TRANSFORMER	EA	13	
P-152-4.01	UNCLASSIFIED EXCAVATION	CY	21,530	
P-152-4.02	UNDERCUT EXCAVATION AND DISPOSAL	CY	2,000	
P-152-4.03	EMBANKMENT	CY	7,174	
P-152-4.04	PAVEMENT EXCAVATION, FULL DEPTH ASPHALT TAXIWAY SHOULDER	SY	17,302	
P-152-4.05	PAVEMENT EXCAVATION, FULL DEPTH AIRFIELD PORTLAND CEMENT CONCRETE PAVEMENT	SY	14,628	
P-152-4.06	GRANULAR STONE BACKFILL FOR UNDERCUT AND UNSUITABLE MATERIAL	CY	2,000	
P-155-8.1	LIME-TREATED SUBGRADE	SY	26,238	
P-155-8.2	LIME	TON	583	
P-219-5.1	CRUSHED AGGREGATE BASE COURSE (16" Min)	CY	5,214	
P-220-6.1	CEMENT TREATED SUBGRADE (12" THICK)	SY	16,470	
P-304-8.1	CEMENT-TREATED AGGREGATE BASE COURSE (8" THICK)	SY	16,470	
P-307-8.1	CEMENT-TREATED AGGREGATE BASE COURSE (8" THICK)	SY	16,470	
P-403-8.1	BITUMINOUS SURFACE COURSE - SHOULDER (2.5" THICK)	SY	9,768	
P-403-8.2	BITUMINOUS BASE COURSE - SHOULDER (2.5" THICK)	SY	9,768	
P-501-8.1	CONCRETE PAVEMENT (PLAIN AND REINFORCED; 19 INCH THICK)	SY	15,156	
P-602-5.1	EMULSIFIED ASPHALT PRIME COAT (@ 0.3 gal/sq yd)	GAL.	2,930	
P-603-5.1	EMULSIFIED ASPHALT TACK COAT (@ 0.05 gal/sq yd)	GAL.	494	

SUMMARY OF QUANTITIES (CONTINUED)

FAA SPEC NO.	DESCRIPTION	UNIT	QUANTITY	FINAL
P-620-5.1	PAVEMENT MARKING (REFLECTIVE)	SF	6,514	
P-620-5.2	PAVEMENT MARKINGS(GREEN, NON-REFLECTIVE)	SF	15,193	
P-620-5.3	TAXIWAY/TAXIWAY INTERMEDIATE HOLDING PATTERN MARKINGS	LF	698	
P-620-5.4	RUNWAY HOLDING POSITION MARKING	LF	248	
P-620-5.5	ENHANCED TAXIWAY CENTERLINE MARKINGS	LF	420	
P-620-5.6	GEOGRAPHIC POSITION MARKING	EACH	6	
P-620-5.7	EXISTING MARKING REMOVAL	SF	10,900	
P-620-5.9	SURFACE PAINTED HOLDING POSITION SIGNS	EA	2	
P-620-5.10	ILS CRITICAL AREA HOLD LINE	LF	113	
D-705-5.1	4 INCH PERFORATED UNDERDRAIN PIPE	LF	2,109	
D-705-5.2	6 INCH PERFORATED UNDERDRAIN PIPE	LF	3,533	
D-705-5.3	6 INCH NON- PERFORATED UNDERDRAIN OUTFALL PIPE	LF	479	
D-705-5.4	UNDERDRAIN CLEANOUT	EA	23	
D-705-5.5	UNDERDRAIN ENDWALL	EA	1	
D-754-5.1	CONCRETE LINED SWALE	LF	2,207	
T-904-5.1	SODDING	SY	32,170	
T-905-5.1	TOPSOILING- (4 INCHES THICK)	SY	32,170	
L-108-5.1	NO. 8 AWG, 5KV, L-824C, TYPE C CABLE, INSTALLED IN DUCT BANK OR CONDUIT	LF	27,000	
L-108-5.2	NO. 6 AWG, SOLID, BARE COPPER COUNTERPOISE WIRE, INSTALLED WITH GROUND RODS & CONNECTORS	LF	9,060	
L-108-5.3	NO. 8 L-824C 5KV TEMPORARY JUMPER CABLE, INCLUDING COUNTERPOISE WITH GROUND RODS & CONNECTORS, TRENCH & BACKFILL, CONDUIT, SAW KERFS & SEALANT, OR OTHER PROTECTION,	LF	24,000	
L-110-5.1	CONCRETE ENCASED ELECTRICAL CONDUIT, 1W-2" SCH. 40 PVC INSTALLED UNDER NEW RIGID PVMT	LF	7,500	
L-110-5.2	CONCRETE ENCASED ELECTRICAL CONDUIT, 1W-2" SCH. 40 PVC INSTALLED IN 6" SAWCUT SHALLOW TRENCH IN EXISTING CONCRETE PAVEMENT	LF	1,560	
L-115-5.1	AIRCRAFT-RATED PULLBOX	EA	6	
L-125-5.01	FURNISH & INSTALL L-852C LED BIDIRECTIONAL TAXIWAY CENTERLINE FIXTURE & TRANSFORMER	EA	130	
L-125-5.02	FURNISH & INSTALL L-852C LED TAXIWAY CLEARANCE BAR FIXTURE & TRANSFORMER	EA	24	
L-125-5.03	FURNISH & INSTALL L-852C LED TAXIWAY CLEARANCE BAR SHALLOW BOX FIXTURE & TRANSFORMER	EA	20	
L-125-5.04	FURNISH & INSTALL L-852C LED BIDIRECTIONAL TAXIWAY CENTERLINE SHALLOW BOX FIXTURE & TRANSFORMER	EA	38	
L-125-5.05	FURNISH & INSTALL L-852F LED OMNIDIRECTIONAL TAXIWAY CENTERLINE SHALLOW BOX FIXTURE & TRANSFORMER	EA	1	
L-125-5.06	FURNISH & INSTALL L-852T LED TAXIWAY EDGE FIXTURE & TRANSFORMER	EA	68	
L-125-5.07	INSTALL NEW L-858 LED GUIDANCE SIGN ON NEW PRE-FAB CONCRETE BASE, COMPLETE WITH GROUND ROD AND BASE CAN	EA	5	
L-125-5.08	REMOVE EXISTING GUIDANCE SIGN AND CONCRETE BASE & INSTALL NEW L-858 LED GUIDANCE SIGN ON EXISTING PRE-FAB CONCRETE BASE AND RECONNECT TO EXISTING REGULATOR CIRCUIT	EA	13	
L-125-5.09	FURNISH MATERIALS AND CONSTRUCT LIGHT BASE BLOCKOUT, COMPLETE	EA	11	
L-125-5.10	FURNISH AND INSTALL 2-PIECE L-868B W/BAND RING AND MULTIHOLE ADAPTER IN NEW PAVEMENT WITH BLANK COVER	EA	1	

MEMPHIS - SHELBY COUNTY AIRPORT AUTHORITY

MEMPHIS INTERNATIONAL AIRPORT
2491 WINCHESTER RD. SUITE 113
MEMPHIS, TENNESSEE
38116-3856

PROGRAM MANAGER
PARSONS
Program Management Consultant
Parsons Transportation Group Inc.
Project Office:
4225 Airways Blvd.
Memphis TN, 38116
JOB NO.

Allen&Hoshall
engineers-architects-surveyors
1661 INTERNATIONAL DRIVE
SUITE 100
MEMPHIS, TENNESSEE 38120
PHONE: 901-820-0820
FAX: 901-683-1001
JOB NO. 72198-B

ENGINEER-SUBCONSULTANT
POWERS HILL DESIGN
CIVIL ENGINEERING. CIVIL RESPONSIBILITY.
80 Monroe Avenue
Suite 420
Memphis, TN 38103
Tel: 901.543.8000
JOB NO.

DRAWN BY: RNP
CHECKED BY: HP
APPROVED BY: TG

WILLIAM T. GIBSON
REGISTERED ENGINEER
AGRICULTURE
No. 104251
STATE OF TENNESSEE
3/17/25

ISSUED FOR BID

NO.	DESCRIPTION	DATE	BY

REVISIONS

PROJECT:

TAXIWAY BRAVO RECONFIGURATION (HOT SPOT 1)

SHEET TITLE:

SUMMARY OF QUANTITIES

MSCAA NO. 18-1413-02
DWG. FILE NAME G-SQ-04.DWG
DATE 03/17/2025
DWG NO. G-SQ-04
SCALE
SHEET NO. 4 of 73
FACILITY NO. NONE

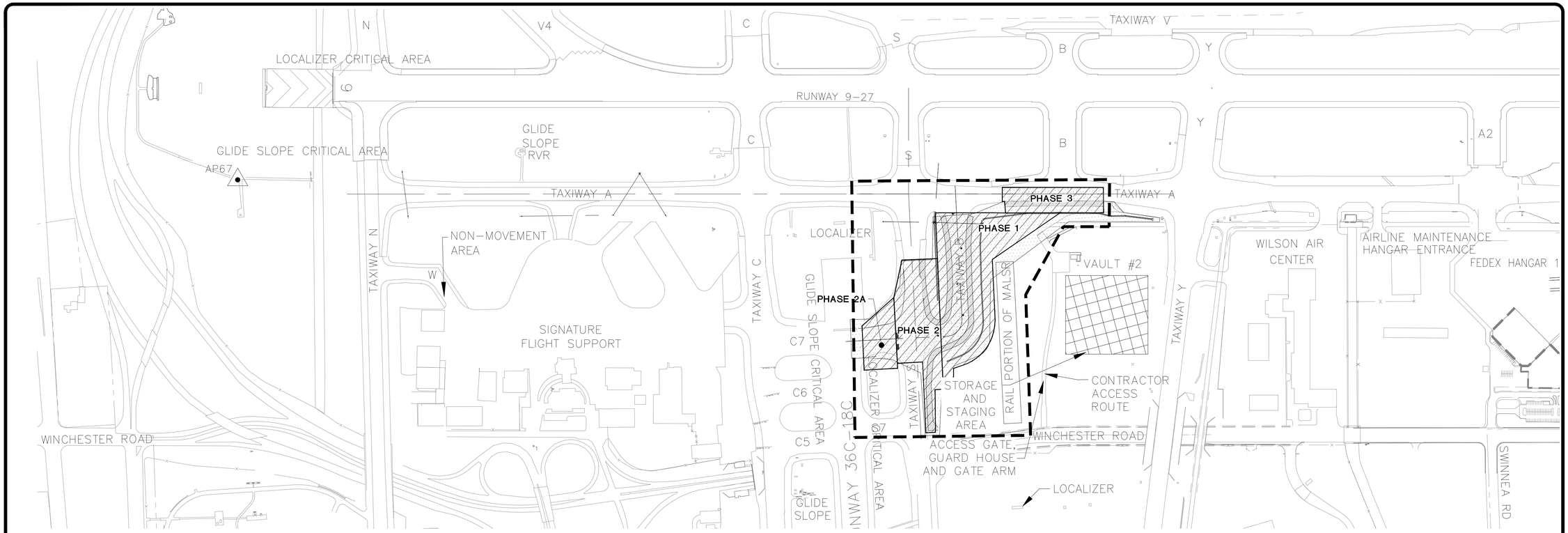

1. THE CONTRACTOR SHALL COMPLY WITH ALL AIRPORT, FEDERAL, STATE AND LOCAL SAFETY REGULATIONS.

2. THE CONTRACTOR SHALL COMPLY WITH ALL CITY, COUNTY AND STATE TRAFFIC REGULATIONS CONCERNING THE USE OF STREETS AND ROADWAYS FOR HAULING. ANY DAMAGE DONE TO THE ROADWAYS DUE TO THE CONTRACTOR'S EQUIPMENT OR HAULING OPERATIONS SHALL BE REPAIRED, TO THE AGENCY'S SATISFACTION, AT NO COST TO THE OWNER.

3. THE CONTRACTOR SHALL TAKE ALL PRECAUTIONARY MEASURES TO PROTECT EXISTING FACILITIES, WHICH ARE TO REMAIN IN PLACE, FROM DAMAGE. ALL SUCH IMPROVEMENTS OR STRUCTURES DAMAGED BY THE CONTRACTOR'S OPERATIONS SHALL BE REPAIRED OR RECONSTRUCTED BY THE CONTRACTOR, SATISFACTORY TO THE OWNER, AT THE EXPENSE OF THE CONTRACTOR.

4. THE CONTRACTOR IS ADVISED THAT OTHER CONSTRUCTION MAY BE IN PROGRESS DURING ALL OR PART OF THIS PROJECT. THE CONTRACTOR SHALL COORDINATE HIS/HER WORK WITH THE WORK OF OTHER CONTRACTORS ON MEMPHIS AIRPORT PROJECTS. SEE CONTRACT DOCUMENTS FOR OTHER REQUIREMENTS AND PROCEDURES TO BE FOLLOWED DURING CONSTRUCTION.

5. SOME EXISTING UTILITIES HAVE BEEN SHOWN ON THE CONSTRUCTION DRAWINGS FOR THE CONVENIENCE OF THE CONTRACTOR. ONLY PORTIONS OF THE EXISTING RUNWAY AND TAXIWAY LIGHTING DUCTS AND CABLE ARE SHOWN. THE CONTRACTOR SHALL BEAR FULL RESPONSIBILITY FOR THE PROTECTION OF UTILITIES. THE OWNER AND PROGRAM MANAGER BEAR NO RESPONSIBILITY FOR UTILITIES NOT SHOWN ON THE PLANS OR NOT IN THE LOCATION SHOWN ON THE PLANS. CONTRACTOR SHALL VERIFY THE EXACT LOCATION OF EXISTING UTILITIES PRIOR TO CONSTRUCTION. AT LEAST FORTY-EIGHT (48) HOURS PRIOR TO BEGINNING CONSTRUCTION THE CONTRACTOR SHALL CONTACT:

MLGW (ELECTRIC & WATER)	PHONE: 1-901-528-4728
CITY OF MEMPHIS (SAN. SEWER)	PHONE: 1-901-576-6725
FAA FACILITIES	PHONE: 1-901-322-8180
MSCAA AIRFIELD ELECTRICIAN	PHONE: 1-901-922-0124
FEDEX	PHONE: 1-901-244-6772
AIRPORT OPERATIONS	PHONE: 1-901-922-8117

THE CONTRACTOR SHALL CONTACT TENNESSEE ONE-CALL AT 1-800-351-1111 AT LEAST THREE (3) WORKING DAYS PRIOR TO EXCAVATION.

EXCAVATION IN AREAS OF EXISTING UTILITIES SHALL BE DONE BY HAND.

UTILITY LOCATION REQUESTS FOR MSCAA AND FAA FACILITIES ARE TO BE SUBMITTED THROUGH THE PROGRAM MANAGER. (7 DAY MINIMUM NOTICE.)

6. REFER TO THE ELECTRICAL & DEMOLITION DRAWINGS FOR REMOVAL OF EXISTING EDGE LIGHTS, TRANSFORMER CANS AND OTHER ELECTRICAL FACILITIES WITHIN THE WORK AREA.

7. THE CONTRACTOR IS RESPONSIBLE FOR ALL CONSTRUCTION SURVEYING. ANY DEVIATIONS FROM EXISTING GRADES AS SHOWN ON THE PLANS SHALL BE IMMEDIATELY REPORTED TO THE PROGRAM MANAGER. EXISTING AIRPORT SURVEY MONUMENTS ARE LOCATED THROUGHOUT THE CONSTRUCTION AREA. THE CONTRACTOR SHALL AT HIS EXPENSE, HAVE A TENNESSEE REGISTERED LAND SURVEYOR REPLACE ANY DISTURBED MONUMENT USING FIRST ORDER TECHNIQUES. REPLACED MONUMENTS SHALL BE REPLACED PER MSCAA DETAILS AND SHALL BE PLACED AT LEAST 10', BUT NOT MORE THAN 50' FROM THE ORIGINAL MONUMENT.

8. THE OWNER RESERVES THE RIGHT TO MAKE REVISIONS TO THE FINISHED ELEVATIONS AND GRADIENTS. IF CHANGES ARE NECESSARY, THE OWNER WILL FURNISH A REVISED GRADING OR PAVING PLAN PRIOR TO CONSTRUCTION WITHIN THAT AREA.

9. ALL EXISTING SHOULDER PAVEMENT INTERFACES SHALL BE MILLED, OR AS SHOWN ON DETAILS.

10. ALL PROPOSED STRUCTURES, i.e. STORM DRAIN MANHOLE/DROP INLETS AND ELECTRICAL PULL BOXES WERE DESIGNED, AND SHALL BE CONSTRUCTED IN ACCORDANCE WITH THE STRUCTURAL REQUIREMENTS OF FEDERAL AVIATION ADMINISTRATION ADVISORY CIRCULARS, UNLESS OTHERWISE NOTED.

11. THIS PROJECT REQUIRES A MINIMUM SAFETY ZONE OF 250 FEET FROM THE CENTERLINE OF AN ACTIVE RUNWAY AND 107 FEET FROM THE CENTERLINE OF AN ACTIVE TAXIWAY. NO CONSTRUCTION ACTIVITY CAN TAKE PLACE IN THIS SAFETY ZONE WITHOUT PRIOR APPROVAL OF THE OWNER, CLOSURE OF PAVEMENT AND ISSUANCE OF APPROVED NOTAM.

12. REFER TO THE OPERATIONAL PLAN OR PHASING PLAN FOR ACCESS POINTS TO BE USED BY THE CONTRACTOR FOR THIS PROJECT.

13. SPECIFICATIONS ARE PROVIDED WHICH REQUIRE THE CONTRACTOR TO APPLY WATER, CHEMICALS, VEGETATION OR OTHER MATERIALS TO PREVENT THE OCCURRENCE OF DUST WHICH IS OBJECTIONABLE TO THE OPERATIONS OR USERS OF THE AREA. THESE SHALL INCLUDE, BUT ARE NOT LIMITED TO, AIRPORT AUTHORITY OPERATIONS, MAINTENANCE, AIRCRAFT OPERATIONS AND AIRFIELD OPERATIONS. THE CONTRACTOR SHALL ALSO DISCONTINUE OPERATIONS, WHICH VIOLATE EXISTING LAWS AND REGULATIONS OR CREATE AN UNDUE HAZARD TO AIR TRAFFIC. ALL COST FOR CONTROLLING DUST OR POLLUTANTS TO THE AIR OF ANY KIND SHALL BE INCIDENTAL TO THE CONTRACT.

14. THE CONTRACTOR SHALL CONDUCT THE FINAL CLEANING OF AFFECTED AIRPORT PAVEMENTS PRIOR TO REOPENING THE PAVEMENTS TO AIR TRAFFIC. THE CONTRACTOR IS RESPONSIBLE FOR CONTINUOUS DAILY CLEAN UP OF HIS/HER WORK AREA. THE CONTRACTOR SHALL CONDUCT POWER VACUUM AND HAND CLEANING OF AFFECTED AIRPORT PAVEMENTS PRIOR TO REOPENING EACH PHASE OF THE PAVEMENTS TO AIR TRAFFIC. CONTRACTOR SHALL CONDUCT POWER VACUUM AND HAND CLEANING OF ACTIVE TAXIWAYS AND RUNWAYS IMMEDIATELY FOLLOWING ANY ACCESS ONTO OR CROSSING OF THE PAVEMENT BY CONSTRUCTION TRAFFIC.

15. PRIOR TO THE START OF WORK ON THE PROJECT, THE CONTRACTOR SHALL SUBMIT THE FOLLOWING INFORMATION FOR REVIEW BY THE PROGRAM MANAGER:
    A. A DETAILED PROGRESS SCHEDULE SHOWING THE PROPOSED SCHEDULE OF WORK.
    B. A SAFETY PLAN OUTLINING HOW THE SAFETY NOTES IN THESE PLANS AND SPECIFICATIONS WILL BE FOLLOWED DURING THE COURSE OF THE PROJECT.
    C. A COMPLETE LIST OF EQUIPMENT AND PERSONNEL TO BE USED INCLUDING STANDBY EQUIPMENT.

16. THE CONTRACTOR IS REQUIRED TO PROVIDE LIGHTING FOR CONSTRUCTION DURING THE HOURS OF DARKNESS AS REQUIRED BY THE SPECIFICATIONS. COSTS FOR LIGHTING SHALL BE INCIDENTAL TO THE CONTRACT.

17. THE CONTRACTOR IS ADVISED THAT FAILURE TO COMPLETE WORK IN THE ALLOTTED TIME, INCLUDING INTERMEDIATE MILESTONES AND TOTAL PROJECT TIME, WILL RESULT IN THE ASSESSMENT OF LIQUIDATED DAMAGES. SEE SPECIAL CONDITION SPECIFICATION SECTION 01100.

18. THE EXACT LIMITS, LIGHTING AND SECURITY REQUIREMENTS OF THE CONTRACTOR'S STAGING AND STORAGE AREA SHALL BE ESTABLISHED BY THE CONTRACTOR WITH THE APPROVAL OF THE PROGRAM MANAGER IN THE GENERAL AREAS SHOWN ON THE PLANS. ANY AND ALL REQUIRED UTILITIES FOR THE CONTRACTOR'S OPERATIONS SHALL BE ARRANGED FOR AND PAID FOR BY THE CONTRACTOR DIRECTLY WITH THE APPROPRIATE UTILITY. UTILITY ARRANGEMENTS SHALL BE SUBJECT TO THE APPROVAL OF THE PROGRAM MANAGER. THE CONTRACTOR SHALL USE THE STORAGE AND STAGING AREA SHOWN ON THE PLANS FOR HIS/HER SHOP, MATERIAL AND EQUIPMENT STORAGE AND OTHER PROJECT RELATED ACTIVITIES, INCLUDING EMPLOYEE PARKING. ALL COSTS ASSOCIATED WITH PREPARING THE STORAGE AND STAGING AREA SITE SHALL BE BORNE BY THE CONTRACTOR PER SPEC P-140. THIS INCLUDES BUT IS NOT LIMITED TO, CLEARING AND GRADING OF THE SITE, CONSTRUCTION OF ALL TEMPORARY UTILITIES, ACCESS ROADS, ALL SECURITY FENCING, CLEAN-UP AND RESTORATION OF SITE TO ORIGINAL CONDITION.

19. THE AREA OF WORK SHOWN ABOVE IS INTENDED TO BE AN APPROXIMATE GRAPHICAL REPRESENTATION ONLY.

20. SEE SHEET G-PH-12 FOR CONTRACTOR ACCESS ROUTES.

21. SEE SHEET G-HZ-06 FOR AIRPORT CONTROL POINTS AND SURVEY BENCHMARKS.

LEGEND

CONTROL POINTS (SEE SHEET G-HZ-06)	AP67
PROPOSED PORTLAND CEMENT CONCRETE PAVEMENT (FULL STRENGTH) P-501	
PROPOSED ASPHALTIC CONCRETE PAVEMENT S-401	
STORAGE AND STAGING AREA	
APPROXIMATE PROJECT LIMITS	

N

0' 150' 300' 600'

FULL SIZE SCALE: 1"=300'
HALF SIZE SCALE: 1"=600'

MEMPHIS - SHELBY COUNTY AIRPORT AUTHORITY

MEMPHIS INTERNATIONAL AIRPORT
2491 WINCHESTER RD. SUITE 113
MEMPHIS, TENNESSEE
38116-3856

PROGRAM MANAGER
PARSONS
Program Management Consultant
Parsons Transportation Group Inc.
Project Office:
4225 Airways Blvd.
Memphis TN, 38116
JOB NO.

Allen&Hoshall
engineers-architects-surveyors
1661 INTERNATIONAL DRIVE
SUITE 100
MEMPHIS, TENNESSEE 38120
PHONE: 901-820-0820
FAX: 901-683-1001
JOB NO. 72198-B

ENGINEER-SUBCONSULTANT
POWERS HILL DESIGN
CIVIL ENGINEERING. CIVIL RESPONSIBILITY.
80 Monroe Avenue
Suite 420
Memphis, TN 38103
Tel: 901.543.8000
JOB NO.

DRAWN BY: RNP
CHECKED BY: HP
APPROVED BY: TG

WILLIAM T. GIBSON
REGISTERED ENGINEER
AGRICULTURE
No. 104251
STATE OF TENNESSEE
3/17/25

ISSUED FOR BID

NO.	DESCRIPTION	DATE	BY

REVISIONS

PROJECT:

TAXIWAY BRAVO RECONFIGURATION (HOT SPOT 1)

SHEET TITLE:

PROJECT LAYOUT PLAN AND GENERAL NOTES

MSCAA NO. 18-1413-02
DWG. FILE NAME G-PL-05.DWG
DATE 03/17/2025
DWG NO. G-PL-05
SCALE
FACILITY NO. NONE
SHEET NO. 5 of 73

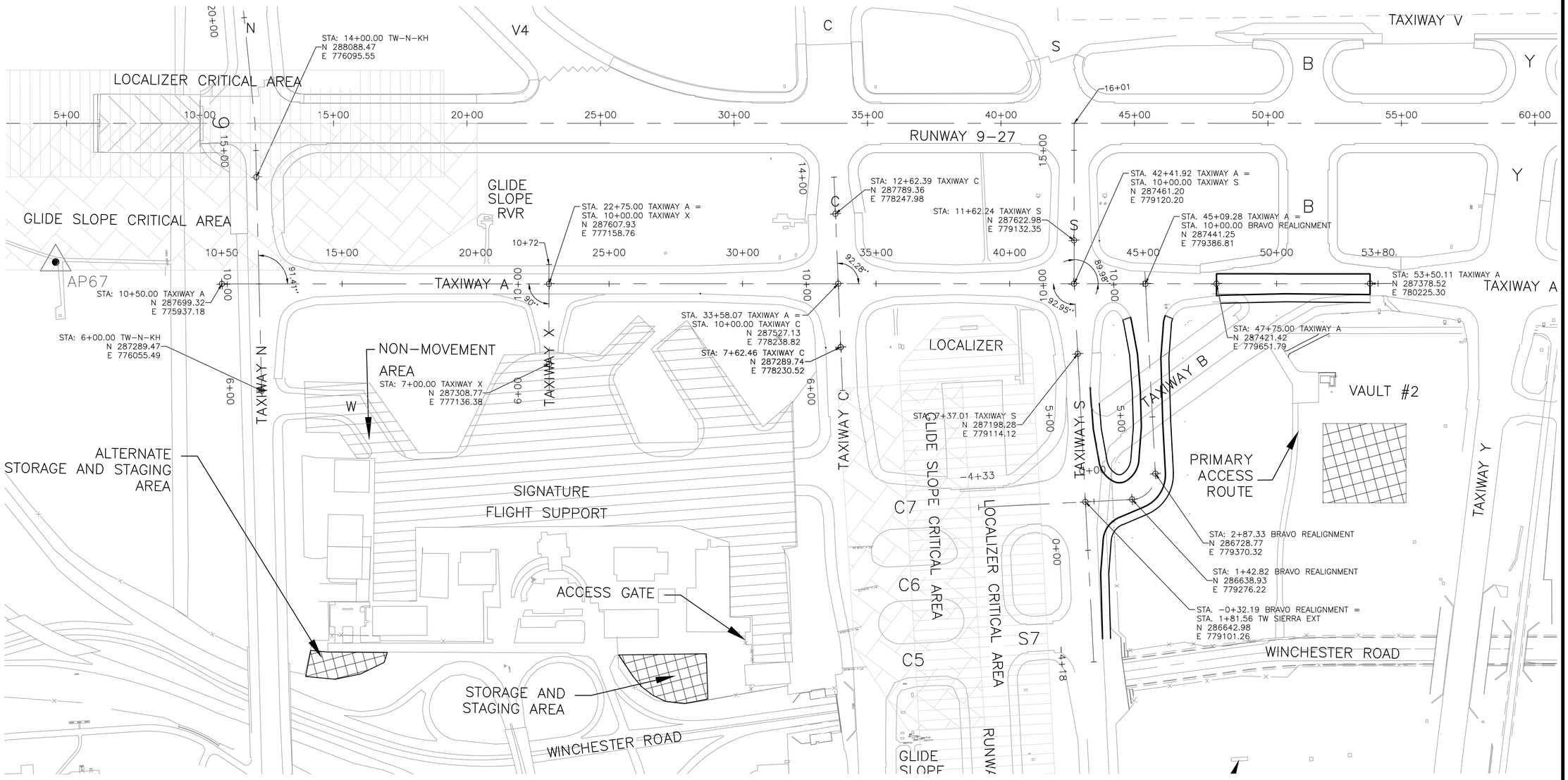

PROJECT CONTROL POINTS AND SURVEY BENCHMARKS

CPT NO.	COORDINATES NORTH	EAST	ELEV.	DESCRIPTION
AP67	287826.47	775321.87	253.29	ALUM. SURV. DISK "MSCAA PRIMARY CONTROL PNT. 67"

CONTROL POINT NOTES:
1. THESE VALUES ARE BASED ON GPS OBSERVATIONS SPECIFIC TO THIS PROJECT AND DIFFER FROM THE MSCAA PUBLISHED VALUES DATED MAY 2008.
2. THE VALUES SHOWN ABOVE WERE USED FOR THIS DESIGN PROJECT AND ARE RELATIVE TO ANY/ALL COORDINATES OR BEARINGS SHOWN HEREIN.
3. COORDINATES ARE TENNESSEE STATE PLANE, NAD 83

0' 100' 200' 400'
FULL SIZE SCALE: 1"=200'
HALF SIZE SCALE: 1"=400'

MEMPHIS - SHELBY COUNTY AIRPORT AUTHORITY
MEMPHIS INTERNATIONAL AIRPORT
2491 WINCHESTER RD. SUITE 113
MEMPHIS, TENNESSEE
38116-3856

PROGRAM MANAGER
PARSONS
Program Management Consultant
Parsons Transportation Group Inc.
Project Office:
4225 Airways Blvd.
Memphis TN, 38116
JOB NO.

Allen&Hoshall
engineers-architects-surveyors
1661 INTERNATIONAL DRIVE
SUITE 100
MEMPHIS, TENNESSEE 38120
PHONE: 901-820-0820
FAX: 901-683-1001
JOB NO. 72198-B

ENGINEER-SUBCONSULTANT
POWERS HILL DESIGN
CIVIL ENGINEERING. CIVIL RESPONSIBILITY.
80 Monroe Avenue
Suite 420
Memphis, TN 38103
Tel: 901.543.8000
JOB NO.

DRAWN BY: RNP
CHECKED BY: HP
APPROVED BY: TG

WILLIAM T. GIBSON REGISTERED ENGINEER AGRICULTURE No. 104251 STATE OF TENNESSEE 3/13/25

ISSUED FOR BID

NO.	DESCRIPTION	DATE	BY

REVISIONS

PROJECT:
TAXIWAY BRAVO RECONFIGURATION (HOT SPOT 1)

SHEET TITLE:
PROJECT HORIZONTAL AND VERTICAL CONTROL

MSCAA NO. 18-1413-02
DWG. FILE NAME G-HZ-06.DWG
DATE 03/17/2025
DWG NO. G-HZ-06
SCALE
FACILITY NO. NONE
SHEET NO. 6 of 73

OPERATIONAL NOTES

1. ALL OF THE CONTRACTOR'S MOVEMENTS AND ACTIVITIES WITHIN THE AIRPORT PROPERTY SHALL BE CLOSELY COORDINATED WITH THE PROGRAM MANAGER AND SHALL BE IN COMPLIANCE WITH THE PROVISIONS OF THE CONTRACT DOCUMENTS AND FAA ADVISORY CIRCULAR 150/5370-2G, "OPERATIONAL SAFETY ON AIRPORTS DURING CONSTRUCTION". NO WORK WILL BE ALLOWED WITHIN TAXIWAY AND RUNWAY SAFETY CONSTRUCTION AREAS, WHICH ARE DESIGNATED AS AREAS, WITHIN 142.5' OF CENTERLINE OF ANY TAXIWAY AND WITHIN 250' OF CENTERLINE OF ANY RUNWAY, UNLESS FULLY COORDINATED WITH THE PROGRAM MANAGER AND/OR UNLESS THE AFFECTED FACILITY OR PAVEMENT HAS BEEN CLOSED TO AIRCRAFT. UNDER NO CIRCUMSTANCES WILL THE CONTRACTOR BE ALLOWED TO CROSS ANY ACTIVE RUNWAY OR TAXIWAY OR AIRCRAFT MOVEMENT AREA OR OTHERWISE BE ALLOWED TO OPERATE WITHIN RUNWAY OR TAXIWAY SAFETY AREAS UNLESS THE PROGRAM MANAGER DETERMINES THAT THE WORK REQUIRES THE MOVEMENT. THIS WORK SHALL BE APPROVED BY THE PROGRAM MANAGER AND A NOTAM ISSUED.

2. SPECIAL ACCESS REQUIREMENTS AND OPERATING LIMITATIONS ARE REQUIRED INSIDE THE SECURITY FENCE. THE CONTRACTOR SHALL DELINEATE WORK LIMITS WITHIN THESE AREAS AS PER PHASING PLAN. CONFINE MEN, EQUIPMENT AND MATERIALS OUTSIDE OF OBJECT FREE AREA (OFA) WHEN A TAXIWAY OR RUNWAY IS ACTIVE. SEE THE SPECIFICATIONS FOR SPECIAL CONDITIONS AND FOR OTHER CONDITIONS RELATING TO SAFETY.

3. THE CONTRACTOR SHALL HAVE ACCESS TO THE AIRPORT ONLY AT THE LOCATIONS DESIGNATED ON THE PLANS. ALL OTHER ACCESS SHALL BE BY SPECIAL REQUEST AND SUBJECT TO APPROVAL BY THE OWNER. THE CONTRACTOR SHALL PROVIDE (CONTRACTOR FURNISHED) SECURITY GUARD HOUSES EQUIPPED WITH POWER, AIR CONDITIONING AND HEAT FOR SECURITY PERSONNEL. THE CONTRACTOR SHALL COORDINATE WITH MSCAA SECURITY TO PROVIDE SECURITY PERSONNEL TO CONTROL MOVEMENTS THROUGH THE CONTRACTOR'S ACCESS GATE UNLESS THE GATE REMAINS LOCKED. NO CONTRACTOR PERSONNEL OR EQUIPMENT WILL BE PERMITTED TO CROSS ANY ACTIVE TAXIWAY OR RUNWAY WITHOUT AN OWNER PROVIDED ESCORT OR APPROVAL OF THE GATE GUARD. GATE GUARDS WILL BE PROVIDED BY MSCAA. THE CONTRACTOR WILL PROVIDE A PORTABLE TOILET FACILITY FOR THE EXCLUSIVE USE OF THE GATE GUARD AT NO ADDITIONAL COST TO THE OWNER.

4. RUNWAY, TAXIWAYS, APRON PAVEMENTS, NAVAIDS AND UNDERGROUND FACILITIES (TO REMAIN) MUST BE PROTECTED FROM DAMAGE CAUSED BY THE CONTRACTOR'S EQUIPMENT. ANY DAMAGE TO PAVEMENTS OR FACILITIES CAUSED BY THE CONTRACTOR'S PERSONNEL OR EQUIPMENT SHALL BE REPAIRED IN A MANNER APPROVED BY THE PROGRAM MANAGER BY THE CONTRACTOR AT NO COST TO THE OWNER. THE CONTRACTOR SHALL BE RESPONSIBLE FOR THE LOCATION AND IDENTIFICATION OF ALL EXISTING UTILITIES AND UNDERGROUND PIPELINES IN THE CONSTRUCTION AREA. ANY DAMAGES TO EXISTING UTILITIES OR UNDERGROUND PIPELINES ON OR OFF AIRPORT PROPERTY SHALL BE THE RESPONSIBILITY OF THE CONTRACTOR. ALL REPAIR WORK SHALL MEET THE APPROVAL OF THE OWNER OF THE DAMAGED UTILITY. NO REIMBURSEMENT WILL BE ALLOWED FOR UTILITY/PIPE REPAIR OR REPLACEMENT.

5. AIRCRAFT OPERATIONS SHALL HAVE PRIORITY OVER ALL VEHICLES, EQUIPMENT AND PERSONNEL AT ALL TIMES. THE CONTRACTOR SHALL EMPLOY STRICT MEASURES TO PREVENT ANY CONFLICT BETWEEN HIS/HER PERSONNEL AND AIRCRAFT ON ANY ACTIVE AIRFIELD PAVEMENT. THE CONTRACTOR AND SUB-CONTRACTORS SHALL REMAIN CLEAR OF ACTIVE RUNWAYS AND TAXIWAYS.

6. IN ORDER FOR THE CONTRACTOR TO OPERATE WITHIN AIRPORT PROPERTY, APPROPRIATE NOTICES TO AIRMEN (NOTAMS) MUST BE ISSUED BY THE OWNER. THESE NOTICES PROVIDE INFORMATION ON CLOSED, LIMITED, OR HAZARDOUS CONDITIONS TO AIRMEN AND USERS OF THE AIRPORT. A 48-HOUR NOTICE IS REQUIRED FOR ISSUANCE OF THE PROPER NOTAM. ALL CONSTRUCTION OPERATIONS MUST BE CLOSELY COORDINATED WITH THE PROGRAM MANAGER FOR NOTAM ISSUANCE.

7. PRIOR TO OPENING FOR USE, THE CONTRACTOR WILL HAVE READY FOR OPERATIONS AND ALLOW ADEQUATE TIME FOR INSPECTION BY AIRPORT OPERATIONS ANY PAVEMENT OR APRON THAT HAS BEEN CLOSED FOR WORK, OR THAT HAS BEEN USED FOR A CROSSING POINT OR HAUL ROUTE BY THE CONTRACTOR. NO BARRICADES SHALL BE REMOVED UNTIL THE INSPECTION BY AIRPORT OPERATIONS IS COMPLETE.

8. CONTRACTOR SHALL KEEP CONSTRUCTION EQUIPMENT BELOW PART 77 SURFACES AT ALL TIMES. IF THE PROJECT REQUIRES THE CONTRACTOR TO PENETRATE ANY PART 77 SURFACE WITH CONSTRUCTION EQUIPMENT DURING CONSTRUCTION THE CONTRACTOR MUST SUBMIT A 7460-1 OBSTRUCTION EVALUATION TO THE FAA. MSCAA CAN ASSIST WITH 7460-1 SUBMISSION. CONTRACTOR WILL FOLLOW PARAMETERS AS STUDIED AND DETERMINED FROM THE 7460 AIRSPACE STUDY. A NOTAM MUST BE ISSUED BEFORE ANY PENETRATION OCCURS.

GENERAL NOTES

1. CONTRACTOR MUST HAVE CLASS III DRIVER ESCORT AT ALL TIMES IN THE WORK AREA DURING CONSTRUCTION. THIS IS TO ENSURE SOMEONE ON THE WORK AREA (EVEN IF CLOSED PAVEMENT) IS FULLY AWARE OF ALL AOA REQUIREMENTS THAT A CLASS II DRIVER WOULDN'T KNOW.

2. CONTRACTOR MUST HAVE SAFETY MEETING EVERY MORNING THAT SPECIFICALLY GOES OVER PAVEMENT CLOSURES AND WORK AREAS PRIOR TO STARTING WORK. DAILY CLOSURE AND WORK PLAN MUST BE PROVIDED TO THE PROGRAM MANAGER.

BARRICADE NOTES

1. THE CONTRACTOR SHALL PROVIDE LOW PROFILE BARRICADES ALONG TAXIWAY EDGES WHEREVER OPEN EXCAVATIONS OR IRREGULAR GRADES ARE LEFT WITHIN THE SAFETY AREA OF AN ACTIVE RUNWAY OR TAXIWAY OR WHERE TEMPORARY PAVEMENT CLOSURES OR AIRCRAFT LIMITATIONS ARE REQUIRED. BARRICADES SHALL BE LINKED TOGETHER OR PLACED AS NOTED ALONG THE AFFECTED PAVEMENT EDGE OR ACCESS TO A CLOSED RUNWAY OR TAXIWAY. ALL TYPE I BARRICADES SHALL BECOME THE PROPERTY OF THE OWNER AND SHALL BE STOCKPILED FOR THE OWNER'S USE AT A LOCATION ON AIRPORT PROPERTY DESIGNATED BY OWNER AFTER COMPLETION OF THE PROJECT. ALL COSTS ASSOCIATED WITH THESE ITEMS ARE INCIDENTAL TO THE WORK INVOLVED.

2. BARRICADES SHALL BE PLACED AS SHOWN ON THE OPERATIONAL PLAN SHEETS G-SP-08 THROUGH G-SP-10 TO DELINEATE THE CONTRACTORS WORK AREAS.

3. BARRICADES SHALL BE AS SHOWN ON DETAILS, SHEET G-PH-09. ALL INCIDENTAL CONNECTORS, SPACERS, SPLICE PLATES, ETC., SHALL BE PAINTED WHITE.

4. ALL BARRICADES SHALL BE CHECKED VISUALLY FOR SIGNS OF WEAR AND TEAR ON A WEEKLY BASIS AND SHALL BE REPAINTED AND/OR REPLACED WHEN DEEMED APPROPRIATE BY THE PROGRAM MANAGER. THE CONDITION OF LIGHTING UNITS SHALL BE CHECKED DAILY AND ALL LIGHT FIXTURES SHALL BE VERIFIED OPERATING BY THE CONTRACTOR BEFORE THE CONTRACTOR CEASES OPERATION EACH DAY. THE AREAS AROUND ALL BARRICADES SHALL BE CLEANED AT LEAST ONCE EACH WEEK AND THE CONTRACTOR SHALL SWEEP UP ACCUMULATED DEBRIS AND REMOVE IT FROM THE SITE. ALL ACTIVITIES CONDUCTED ADJACENT TO ACTIVE RUNWAYS OR TAXIWAYS SHALL BE COORDINATED WITH THE PROGRAM MANAGER.

5. BARRICADES ALONG ACTIVE APRON, RUNWAY OR TAXIWAY PAVEMENT SHALL BE PLACED APPROXIMATELY 10 FEET FROM THE EDGE OF THE FULL STRENGTH PAVEMENT, WHERE POSSIBLE OR AT THE CONSTRUCTION RUNWAY OR TAXIWAY SAFETY AREA LIMIT.

6. ALTERNATE FORMS OF BARRICADES MAY BE PROPOSED BY THE CONTRACTOR WHICH MEET THESE FUNCTIONAL REQUIREMENTS AND FAA STANDARDS. APPROVALS OF ANY SUCH SUBSTITUTION (IF GRANTED) SHALL BE BY AIRPORT OPERATIONS AND THE PROGRAM MANAGER.

7. THE FINAL LOCATION FOR THE BARRICADES SHALL BE ESTABLISHED IN THE FIELD WITH CONCURRENCE FROM AIRPORT OPERATIONS AND THE PROGRAM MANAGER.

8. BARRICADES SHALL BE PAID FOR UNDER ITEM S-100-3.3. PLACEMENT, MAINTENANCE AND SUBSEQUENT RELOCATION AND REMOVAL OF THE BARRICADES SHALL BE INCIDENTAL TO THE ITEM.

9. THE CONTRACTOR SHALL HAVE REPLACEMENT LIGHTS ON SITE AND SHALL REPLACE LIGHTS WITHIN ONE HOUR OF NOTIFICATION BY THE PROGRAM MANAGER OR AIRPORT PERSONNEL. CONTRACTOR SHALL PROVIDE THE NAME AND TELEPHONE NUMBER FOR AN ON-CALL REPRESENTATIVE 24 HOURS PER DAY, SEVEN DAYS PER WEEK TO REPLACE INOPERATIVE LIGHTS. THE REPRESENTATIVE SHALL RESPOND TO THE SITE WITHIN ONE HOUR OF BEING NOTIFIED.

10. BARRICADES SHALL BE PLACED SO THAT LIGHTS ARE ALTERNATING FLASHING AND STEADY.

REOPENING OF A CLOSED SURFACE

1. PRIOR TO THE COMPLETION OF ANY PHASE, ALL TAXIWAY SURFACES TO BE REOPENED AT THE COMPLETION OF THE PHASE SHALL BE SWEPT AND VACUUMED CLEAN. ALL WORK SHALL BE COMPLETE AND ACCEPTED BY THE PROGRAM MANAGER AND OPERATIONS PRIOR TO OPENING FOR AIRCRAFT USE.

2. PRIOR TO THE REMOVAL OF ANY BARRICADES OR LIGHTED CONES, THE CONTRACTOR SHALL REQUEST, THROUGH THE PROGRAM MANAGER, AN INSPECTION BY AIRPORT OPERATIONS. A FOUR HOUR NOTICE MUST BE GIVEN FOR EXTENDED CLOSURES FOR THE INSPECTION. NO TAXIWAY MAY BE REOPENED UNTIL AIRPORT OPERATIONS HAS PERFORMED THE INSPECTION AND APPROVED THE REOPENING. SURFACES BELOW AND AROUND THE BARRICADES AND CONES MUST BE CLEANED PRIOR TO REQUESTING THE INSPECTION.

MEMPHIS - SHELBY COUNTY AIRPORT AUTHORITY

MEMPHIS INTERNATIONAL AIRPORT
2491 WINCHESTER RD. SUITE 113
MEMPHIS, TENNESSEE
38116-3856

PROGRAM MANAGER
PARSONS
Program Management Consultant
Parsons Transportation Group Inc.
Project Office:
4225 Airways Blvd.
Memphis TN, 38116
JOB NO.

Allen&Hoshall
engineers-architects-surveyors
1661 INTERNATIONAL DRIVE
SUITE 100
MEMPHIS, TENNESSEE 38120
PHONE: 901-820-0820
FAX: 901-683-1001
JOB NO. 72198-B

ENGINEER-SUBCONSULTANT
POWERS HILL DESIGN
CIVIL ENGINEERING. CIVIL RESPONSIBILITY.
80 Monroe Avenue
Suite 420
Memphis, TN 38103
Tel: 901.543.8000
JOB NO.

DRAWN BY: RNP
CHECKED BY: HP
APPROVED BY: TG

WILLIAM T. GIBSON
REGISTERED ENGINEER
AGRICULTURE
No. 104251
STATE OF TENNESSEE
3/13/25

ISSUED FOR BID

NO.	DESCRIPTION	DATE	BY

REVISIONS

PROJECT:
TAXIWAY BRAVO RECONFIGURATION (HOT SPOT 1)

SHEET TITLE:
OPERATIONAL NOTES

MSCAA NO. 18-1413-02
DWG. FILE NAME G-SP-07.DWG
DATE 03/17/2025
DWG NO. G-SP-07
SCALE
SHEET NO. 7 of 73
FACILITY NO. NONE

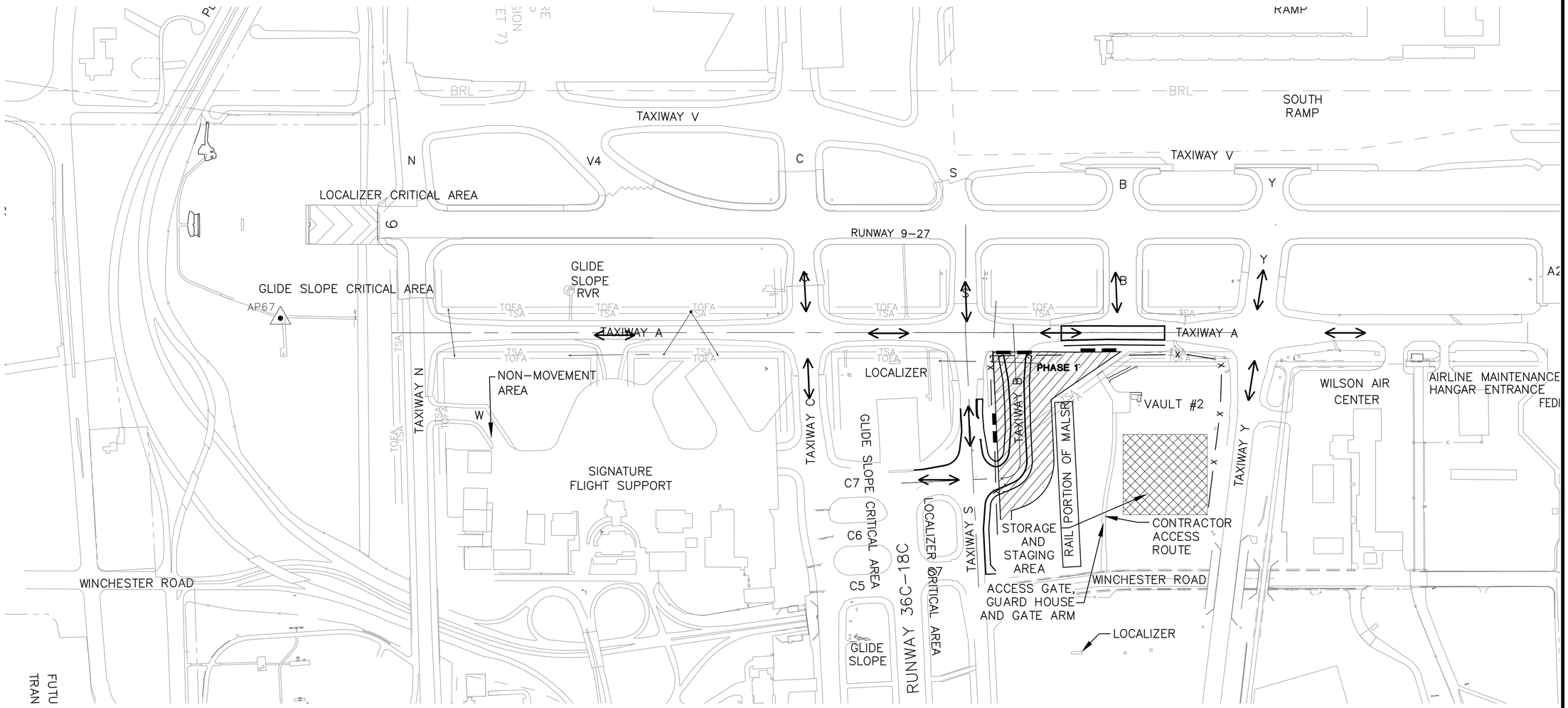

NOTES

1. SEE SHEET G–PH–09 FOR FENCE DETAILS AND NOTES.
2. CONTRACTOR SHALL ENSURE EQUIPMENT, BUILDINGS, AND MATERIALS STAGED OR STORED DO NOT PENETRATE THE 50:1 APPROACH SURFACE FOR RUNWAY 9, 18R–36L, 18C–36C, 18L–36R. ANY EQUIPMENT EXCEEDING 40' IN HEIGHT IN THE LAYDOWN AREA MUST BE APPROVED BY A 7460–1 AIRSPACE STUDY. .
3. SEE PHASING SHEETS FOR HAUL ROUTES AND LOCATION OF GUARD HOUSES AND FLAG PERSONNEL.
4. TAXIWAYS C, S, AND A MUST REMAIN OPEN TO AIRCRAFT OPERATIONS DURING PHASE 1.
5. TAXIWAY LIGHTS ON TAXIWAYS OPEN TO AIRCRAFT OPERATIONS MUST REMAIN ENERGIZED AT ALL TIMES.
6. TYPE I BARRICADES MUST BE PLACED ALONG THE EDGE OF AN ACTIVE TAXIWAY WHEN THE DROP OFF EXCEEDS 3" AND THE TAXIWAY IS OPEN TO AIR OPERATIONS.
7. FLAG PERSONNEL ARE REQUIRED ANYTIME CONSTRUCTION VEHICLES ARE CROSSING AN ACTIVE TAXIWAY. FLAG PERSONNEL SHALL BE PROVIDED BY THE CONTRACTOR. CONTRACTOR SHALL PROVIDE SIGNAGE AS INDICATED ON G–PH–13.
8. A FULL–TIME DEDICATED VACUUM TRUCK IS REQUIRED AT EACH ACTIVE TAXIWAY CROSSING WITH ONE BACKUP VACUUM TRUCK FOR THE PROJECT (INCIDENTAL TO S–100 PAY ITEM).
9. ACCESS TO THE CONSTRUCTION AREA SHALL BE BY ESCORTED VEHICLES. CONTRACTOR MUST PROVIDE ESCORT AND HAVE APPROPRIATE DRIVING PRIVILEGES (CLASS III TYP.).
10. ROFA/TSA/TOFA OF ADJACENT OPEN AIRFIELD PAVEMENT SHOULD BE PHYSICALLY MARKED IN THE FIELD TO AVOID INADVERTENT ENTRY.

LEGEND

TYPE 1 BARRICADES	
PLASTIC SAFETY FENCE	—— X ——
PAVEMENT OPEN TO AIRCRAFT	⟷
APPROXIMATE CONSTRUCTION AREA PHASE 1	
CONSTRUCTION ACCESS ROUTE	⟷
CONTRACTOR LAY–DOWN AREA	

0' 150' 300' 600'
FULL SIZE SCALE: 1"=300'
HALF SIZE SCALE: 1"=600'

MEMPHIS - SHELBY COUNTY AIRPORT AUTHORITY

MEMPHIS INTERNATIONAL AIRPORT
2491 WINCHESTER RD. SUITE 113
MEMPHIS, TENNESSEE
38116–3856

PROGRAM MANAGER
PARSONS
Program Management Consultant
Parsons Transportation Group Inc.
Project Office:
4225 Airways Blvd.
Memphis TN, 38116
JOB NO.

Allen&Hoshall
engineers-architects-surveyors
1661 INTERNATIONAL DRIVE
SUITE 100
MEMPHIS, TENNESSEE 38120
PHONE: 901–820–0820
FAX: 901–683–1001
JOB NO. 72198-B

ENGINEER–SUBCONSULTANT
POWERS HILL DESIGN
CIVIL ENGINEERING. CIVIL RESPONSIBILITY.
80 Monroe Avenue
Suite 420
Memphis, TN 38103
Tel: 901.543.8000
JOB NO.

DRAWN BY: RNP
CHECKED BY: HP
APPROVED BY: TG

WILLIAM T. GIBSON
REGISTERED ENGINEER
AGRICULTURE
No. 104251
STATE OF TENNESSEE
3/17/25

ISSUED FOR BID

NO.	DESCRIPTION	DATE	BY

REVISIONS

PROJECT:
TAXIWAY BRAVO RECONFIGURATION (HOT SPOT 1)

SHEET TITLE:
OPERATIONAL PLAN PHASE 1

MSCAA NO. 18-1413-02
DWG. FILE NAME G-SP-08.DWG
DATE 03/17/2025
DWG NO. G-SP-08
SCALE
FACILITY NO. NONE
SHEET NO. 8 of 73

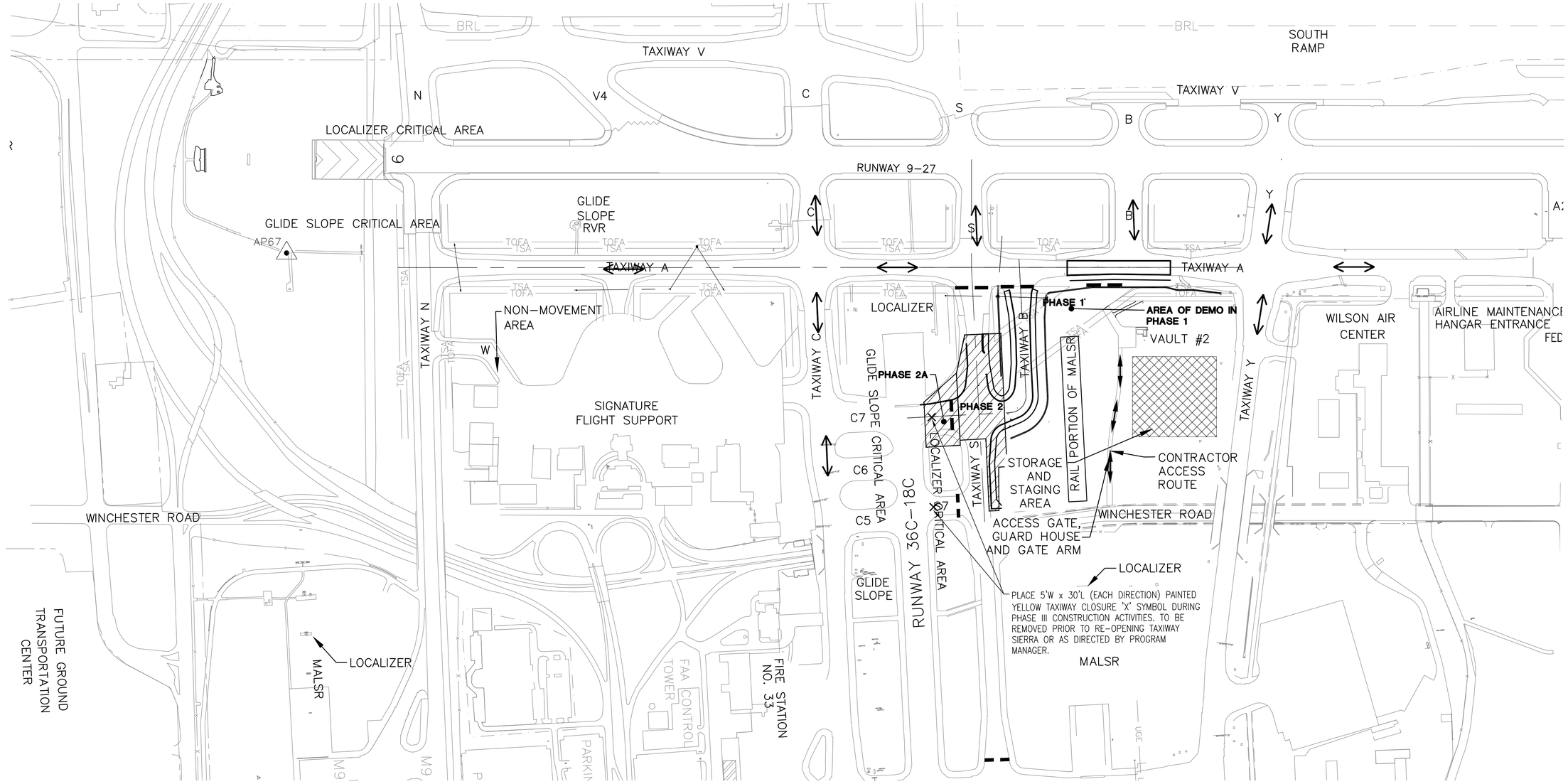

NOTES

1. SEE SHEET G–SP–12 FOR FENCE DETAILS AND NOTES.
2. CONTRACTOR SHALL ENSURE EQUIPMENT, BUILDINGS, AND MATERIALS STAGED OR STORED DO NOT PENETRATE THE 50:1 APPROACH SURFACE FOR RUNWAY 9, 18R–36L, 18C–36C, 18L–36R. ANY EQUIPMENT EXCEEDING 40' IN HEIGHT IN THE LAYDOWN AREA MUST BE APPROVED BY A 7460–1 AIRSPACE STUDY. .
3. SEE PHASING SHEETS FOR HAUL ROUTES AND LOCATION OF GUARD HOUSES AND FLAG PERSONNEL.
4. TAXIWAYS C, Y, AND N MUST REMAIN OPEN TO AIRCRAFT OPERATIONS DURING PHASE 2.
5. TAXIWAY LIGHTS ON TAXIWAYS OPEN TO AIRCRAFT OPERATIONS MUST REMAIN ENERGIZED AT ALL TIMES.
6. TYPE I BARRICADES MUST BE PLACED ALONG THE EDGE OF AN ACTIVE TAXIWAY WHEN THE DROP OFF EXCEEDS 3" AND THE TAXIWAY IS OPEN TO AIR OPERATIONS.
7. FLAG PERSONNEL ARE REQUIRED ANYTIME CONSTRUCTION VEHICLES ARE CROSSING AN ACTIVE TAXIWAY. FLAG PERSONNEL SHALL BE PROVIDED BY THE CONTRACTOR. CONTRACTOR SHALL PROVIDE SIGNAGE AS INDICATED ON G–PH–13.
8. A FULL–TIME DEDICATED VACUUM TRUCK IS REQUIRED AT EACH ACTIVE TAXIWAY CROSSING WITH ONE BACKUP VACUUM TRUCK FOR THE PROJECT (INCIDENTAL TO S–100 PAY ITEM).
9. ACCESS TO THE CONSTRUCTION AREA SHALL BE BY ESCORTED VEHICLES. CONTRACTOR MUST PROVIDE ESCORT AND HAVE APPROPRIATE DRIVING PRIVILEGES (CLASS III TYP.).
10. ROFA/TSA/TOFA OF ADJACENT OPEN AIRFIELD PAVEMENT SHOULD BE PHYSICALLY MARKED IN THE FIELD TO AVOID INADVERTENT ENTRY.

LEGEND

TYPE 1 BARRICADES	
PLASTIC SAFETY FENCE	— X —
PAVEMENT OPEN TO AIRCRAFT	⟷
APPROXIMATE CONSTRUCTION AREA PHASE 2	
FLAG PERSONS (2) REQUIRED SAFETY GATES REQUIRED	
CONSTRUCTION ACCESS ROUTE	⟷
CONTRACTOR LAY–DOWN AREA	

0' 150' 300' 600'
FULL SIZE SCALE: 1"=300'
HALF SIZE SCALE: 1"=600'

MEMPHIS - SHELBY COUNTY AIRPORT AUTHORITY
MEMPHIS INTERNATIONAL AIRPORT
2491 WINCHESTER RD. SUITE 113
MEMPHIS, TENNESSEE
38116–3856

PROGRAM MANAGER
PARSONS
Program Management Consultant
Parsons Transportation Group Inc.
Project Office:
4225 Airways Blvd.
Memphis TN, 38116
JOB NO.

Allen&Hoshall
engineers-architects-surveyors
1661 INTERNATIONAL DRIVE
SUITE 100
MEMPHIS, TENNESSEE 38120
PHONE: 901–820–0820
FAX: 901–683–1001
JOB NO. 72198-B

ENGINEER–SUBCONSULTANT
POWERS HILL DESIGN
CIVIL ENGINEERING. CIVIL RESPONSIBILITY.
80 Monroe Avenue
Suite 420
Memphis, TN 38103
Tel: 901.543.8000
JOB NO.

DRAWN BY: RNP
CHECKED BY: HP
APPROVED BY: TG

WILLIAM T. GIBSON REGISTERED ENGINEER AGRICULTURE No. 104251 STATE OF TENNESSEE
3/13/25

ISSUED FOR BID

NO.	DESCRIPTION	DATE	BY

REVISIONS

PROJECT:
TAXIWAY BRAVO RECONFIGURATION (HOT SPOT 1)

SHEET TITLE:
OPERATIONAL PLAN PHASE 2

MSCAA NO. 18-1413-02
DWG. FILE NAME G-SP-09.DWG
DATE 03/17/2025
DWG NO. G-SP-09
SCALE
SHEET NO. 9 of 73
FACILITY NO. NONE

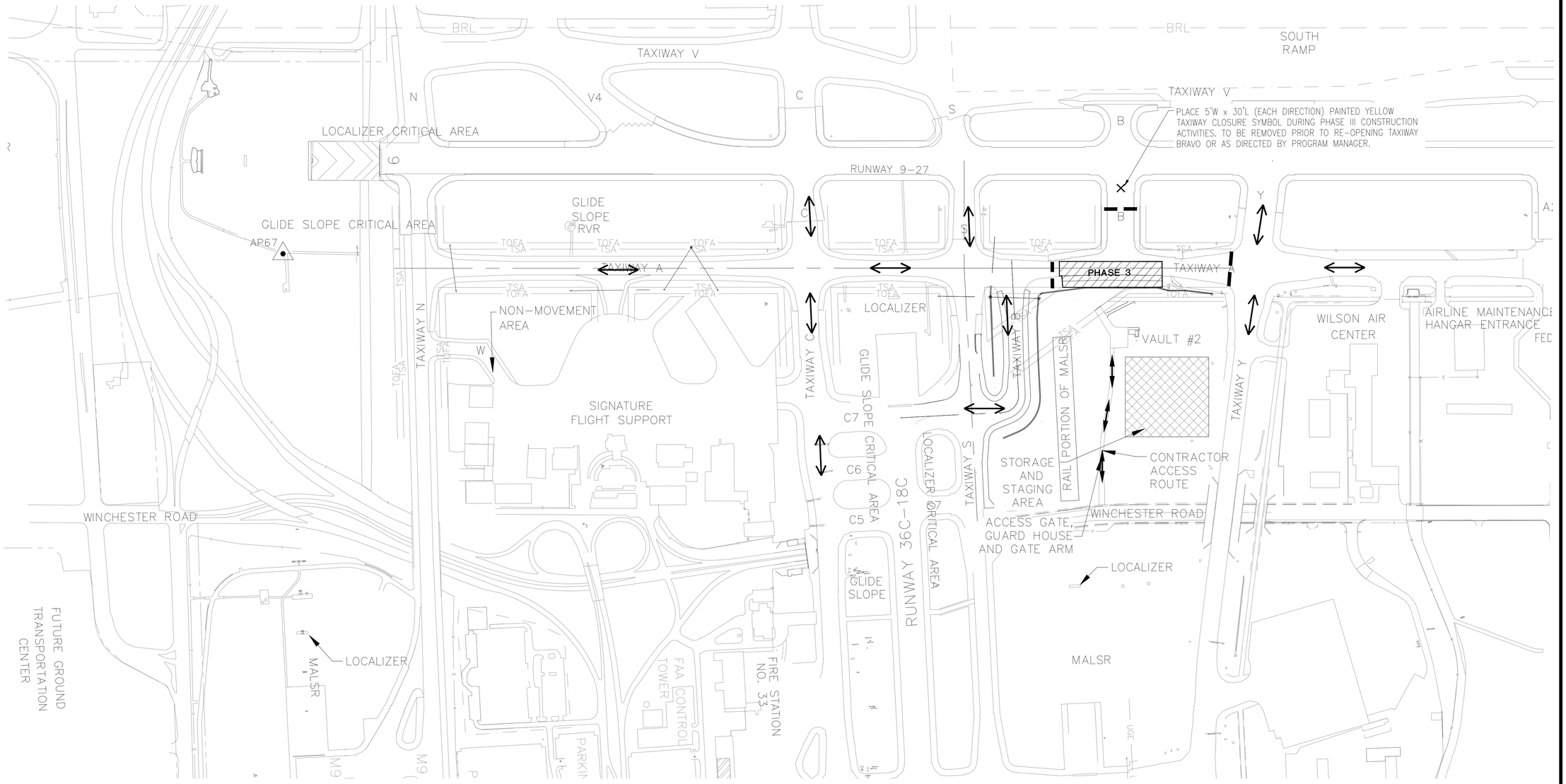

NOTES

1. SEE SHEET G-SP-12 FOR FENCE DETAILS AND NOTES.
2. CONTRACTOR SHALL ENSURE EQUIPMENT, BUILDINGS, AND MATERIALS STAGED OR STORED DO NOT PENETRATE THE 50:1 APPROACH SURFACE FOR RUNWAY 9, 18R-36L, 18C-36C, 18L-36R. ANY EQUIPMENT EXCEEDING 40' IN HEIGHT IN THE LAYDOWN AREA MUST BE APPROVED BY A 7460-1 AIRSPACE STUDY. .
3. SEE PHASING SHEETS FOR HAUL ROUTES AND LOCATION OF GUARD HOUSES AND FLAG PERSONNEL.
4. TAXIWAYS C, Y, AND S MUST REMAIN OPEN TO AIRCRAFT OPERATIONS DURING PHASE 3.
5. TAXIWAY LIGHTS ON TAXIWAYS OPEN TO AIRCRAFT OPERATIONS MUST REMAIN ENERGIZED AT ALL TIMES.
6. TYPE I BARRICADES MUST BE PLACED ALONG THE EDGE OF AN ACTIVE TAXIWAY WHEN THE DROP OFF EXCEEDS 3" AND THE TAXIWAY IS OPEN TO AIR OPERATIONS.
7. FLAG PERSONNEL ARE REQUIRED ANYTIME CONSTRUCTION VEHICLES ARE CROSSING AN ACTIVE TAXIWAY. FLAG PERSONNEL SHALL BE PROVIDED BY THE CONTRACTOR. CONTRACTOR SHALL PROVIDE SIGNAGE AS INDICATED ON G-PH-13.
8. A FULL-TIME DEDICATED VACUUM TRUCK IS REQUIRED AT EACH ACTIVE TAXIWAY CROSSING WITH ONE BACKUP VACUUM TRUCK FOR THE PROJECT (INCIDENTAL TO S-100 PAY ITEM).
9. ACCESS TO THE CONSTRUCTION AREA SHALL BE BY ESCORTED VEHICLES. CONTRACTOR MUST PROVIDE ESCORT AND HAVE APPROPRIATE DRIVING PRIVILEGES (CLASS III TYP.).
10. ROFA/TSA/TOFA OF ADJACENT OPEN AIRFIELD PAVEMENT SHOULD BE PHYSICALLY MARKED IN THE FIELD TO AVOID INADVERTENT ENTRY.

LEGEND

TYPE 1 BARRICADES	
PLASTIC SAFETY FENCE	x
PAVEMENT OPEN TO AIRCRAFT	
APPROXIMATE CONSTRUCTION AREA PHASE 2	
CONSTRUCTION ACCESS ROUTE	
CONTRACTOR LAY-DOWN AREA	

N

0' 150' 300' 600'
FULL SIZE SCALE: 1"=300'
HALF SIZE SCALE: 1"=600'

MEMPHIS - SHELBY COUNTY AIRPORT AUTHORITY
MEMPHIS INTERNATIONAL AIRPORT
2491 WINCHESTER RD. SUITE 113
MEMPHIS, TENNESSEE
38116-3856

PROGRAM MANAGER
PARSONS
Program Management Consultant
Parsons Transportation Group Inc.
Project Office:
4225 Airways Blvd.
Memphis TN, 38116
JOB NO.

Allen&Hoshall
engineers-architects-surveyors
1661 INTERNATIONAL DRIVE
SUITE 100
MEMPHIS, TENNESSEE 38120
PHONE: 901-820-0820
FAX: 901-683-1001
JOB NO. 72198-B

ENGINEER-SUBCONSULTANT
POWERS HILL DESIGN
CIVIL ENGINEERING. CIVIL RESPONSIBILITY.
80 Monroe Avenue
Suite 420
Memphis, TN 38103
Tel: 901.543.8000
JOB NO.

DRAWN BY: RNP
CHECKED BY: HP
APPROVED BY: TG

WILLIAM T. GIBSON REGISTERED ENGINEER AGRICULTURE No. 104251 STATE OF TENNESSEE
3/13/25

ISSUED FOR BID

NO.	DESCRIPTION	DATE	BY

REVISIONS

PROJECT:
TAXIWAY BRAVO RECONFIGURATION (HOT SPOT 1)

SHEET TITLE:
OPERATIONAL PLAN PHASE 3

MSCAA NO. 18-1413-02
DWG. FILE NAME G-SP-10.DWG
DATE 03/17/2025
DWG NO. G-SP-10
SCALE
SHEET NO. 10 of 73
FACILITY NO. NONE

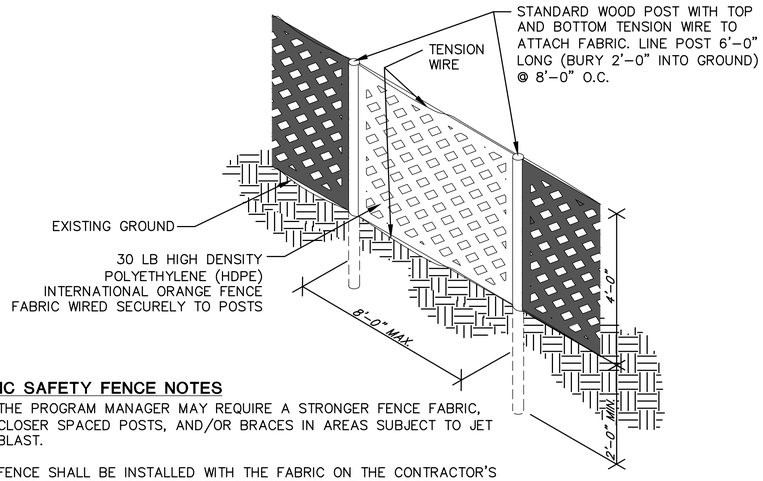

PLASTIC SAFETY FENCE NOTES

1. THE PROGRAM MANAGER MAY REQUIRE A STRONGER FENCE FABRIC, CLOSER SPACED POSTS, AND/OR BRACES IN AREAS SUBJECT TO JET BLAST.
2. FENCE SHALL BE INSTALLED WITH THE FABRIC ON THE CONTRACTOR'S WORK AREA SIDE OF THE POST, AND NOT ON THE AOA SIDE.
3. AT PROJECT COMPLETION, ALL FENCE POSTS AND FABRIC SHALL BE REMOVED FROM AIRPORT PROPERTY AND SHALL REMAIN THE PROPERTY OF CONTRACTOR.
4. CONTRACTOR SHALL INSPECT AND MAINTAIN THE FENCE DAILY, OR MORE OFTEN, IF WEATHER OR OTHER CONDITIONS DICTATE.
5. CONTRACTOR SHALL CUT OR MAINTAIN VEGETATIVE GROWTH ON BOTH SIDES OF THE FENCE TO THE SATISFACTION OF THE PROGRAM MANAGER.

1 / G-PH-11 — PLASTIC SAFETY FENCE

PAY ITEM #S-100-3.1 N.T.S.

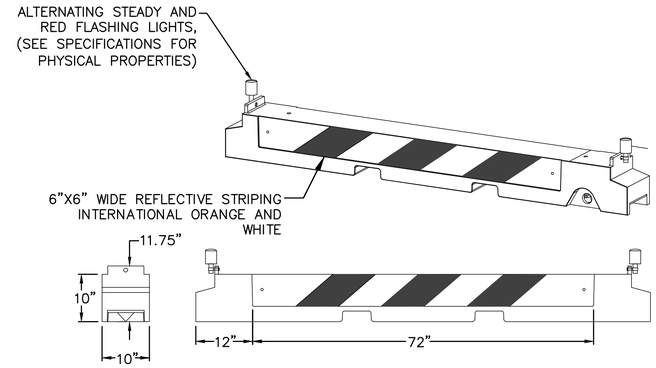

BARRICADE NOTES:

1. CONTRACTOR SHALL BE RESPONSIBLE FOR MAINTAINING PROPER POSITIONING OF ALL BARRICADES.
2. SANDBAGS AND/OR ANCHORS MAY BE REQUIRED TO HOLD THE BARRICADES IN PLACE WHERE EXPOSED TO JET BLAST. SANDBAGS AND ANCHORS ARE INCIDENTAL TO THE ITEM.
3. BARRICADES SHALL BE PLACED ON 10' CENTERS. EXCEPT AT CENTERLINES WHERE TWO-WAY TRAFFIC SHALL BE PERMITTED.
4. CONTRACTOR SHALL HAVE REPLACEMENT LIGHTS ON-SITE AND SHALL REPLACE LIGHTS WITHIN ONE HOUR OF NOTIFICATION BY THE PROGRAM MANAGER OR AIRPORT PERSONNEL. CONTRACTOR SHALL PROVIDE THE NAME AND TELEPHONE NUMBER OF AN ON-CALL REPRESENTATIVE WHO IS AVAILABLE 24 HOURS PER DAY, SEVEN DAYS PER WEEK AND CAN REPLACE INOPERATIVE LIGHTS.
5. BARRICADE LOCATIONS SHALL BE COORDINATED WITH THE PROGRAM MANAGER.
6. CONTRACTOR SHALL BE RESPONSIBLE FOR MAINTAINING AND SECURELY FASTENING FLAGS TO ALL BARRICADES.
7. ALL BARRIERS SHALL BE CHECKED VISUALLY FOR SIGNS OF WEAR AND TEAR ON A WEEKLY BASIS AND REPLACED OR CLEANED AS NEEDED.
8. NO PART OF THE BARRIER SHALL EXCEED 24" IN HEIGHT FROM THE PAVEMENT.
9. MULTIPLE INSTALLATIONS AND REMOVALS MAY BE REQUIRED. CONTRACTOR WILL BE PAID FOR ONLY THE INITIAL INSTALLATION.

2 / G-PH-11 — LOW PROFILE BARRICADE (TYPE 1)

PAY ITEM #S-100-3.3 (CONTRACTOR FURNISHED) N.T.S.

GUARD HOUSE AND CROSSING GATE ARM NOTES:

1. AT PROJECT COMPLETION, ALL CROSSING GATE ARMS SUPPLIED BY THE CONTRACTOR SHALL REMAIN PROPERTY OF THE CONTRACTOR.
2. THE CROSSING GATE ARMS ARE FOR USE IN COMBINATION WITH A GUARD HOUSE.
3. AT PROJECT COMPLETION, ALL GUARD HOUSES SUPPLIED BY THE CONTRACTOR SHALL REMAIN PROPERTY OF THE CONTRACTOR.
4. CONTRACTOR FURNISHED GUARD HOUSES SHALL BE PAID FOR UNDER ITEM #S-100-3.2
5. CROSSING GATE ARMS SHALL BE MOTORIZED AND CONTROLLED FROM GUARDHOUSE. GATE ARM MOTORS SHALL MEET THE FOLLOWING REQUIREMENTS
   - 5.1. $\frac{1}{3}$ HO
   - 5.2. 115 VAC
   - 5.3. 60 HZ
   - 5.4. SINGLE PHASE
   - 5.5. INSTANT REVERSING
   - 5.6. CONTINUOUS DUTY MOTOR FOR OPERATING GATE ARM
6. GATE ARMS ARE TO BE LOWERED AT THE CLOSE OF BUSINESS DAILY. ARMS SHALL NOT BE LEFT UP WHEN UNATTENDED

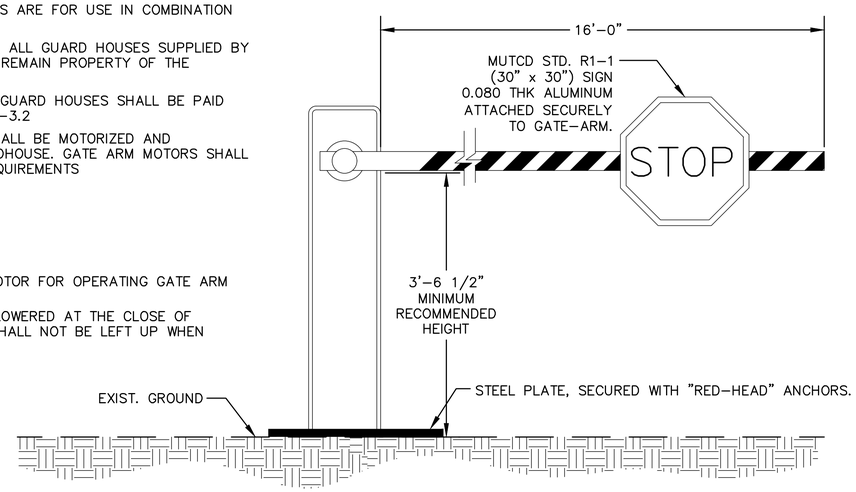

3 / G-PH-11 — CROSSING GATE ARM DETAIL

PAY ITEM #S-100-3.7 (CONTRACTOR FURNISHED) ~~N.T.S.~~

MEMPHIS - SHELBY COUNTY AIRPORT AUTHORITY

MEMPHIS INTERNATIONAL AIRPORT
2491 WINCHESTER RD. SUITE 113
MEMPHIS, TENNESSEE
38116-3856

PROGRAM MANAGER
PARSONS
Program Management Consultant
Parsons Transportation Group Inc.
Project Office:
4225 Airways Blvd.
Memphis TN, 38116
JOB NO.

Allen&Hoshall
engineers-architects-surveyors
1661 INTERNATIONAL DRIVE
SUITE 100
MEMPHIS, TENNESSEE 38120
PHONE: 901-820-0820
FAX: 901-683-1001
JOB NO. 72198-B

ENGINEER-SUBCONSULTANT
POWERS HILL DESIGN
CIVIL ENGINEERING. CIVIL RESPONSIBILITY.
80 Monroe Avenue
Suite 420
Memphis, TN 38103
Tel: 901.543.8000
JOB NO.

DRAWN BY: RNP
CHECKED BY: HP
APPROVED BY: TG

WILLIAM T. GIBSON REGISTERED ENGINEER AGRICULTURE No. 104251 STATE OF TENNESSEE 3/17/25

ISSUED FOR BID

NO.	DESCRIPTION	DATE	BY

REVISIONS

PROJECT:
TAXIWAY BRAVO RECONFIGURATION (HOT SPOT 1)

SHEET TITLE:
DETAILS AND NOTES

MSCAA NO. 18-1413-02
DWG. FILE NAME G-PH-11.DWG
DATE 03/17/2025
DWG NO. G-PH-11
SCALE
SHEET NO. 11 of 73
FACILITY NO. NONE

Drawing name: \\Ahmem03\72198-b\18-1413-02\DRAWINGS\G-PH-11.dwg 22x34 May 28, 2025 10:35am by: nparris

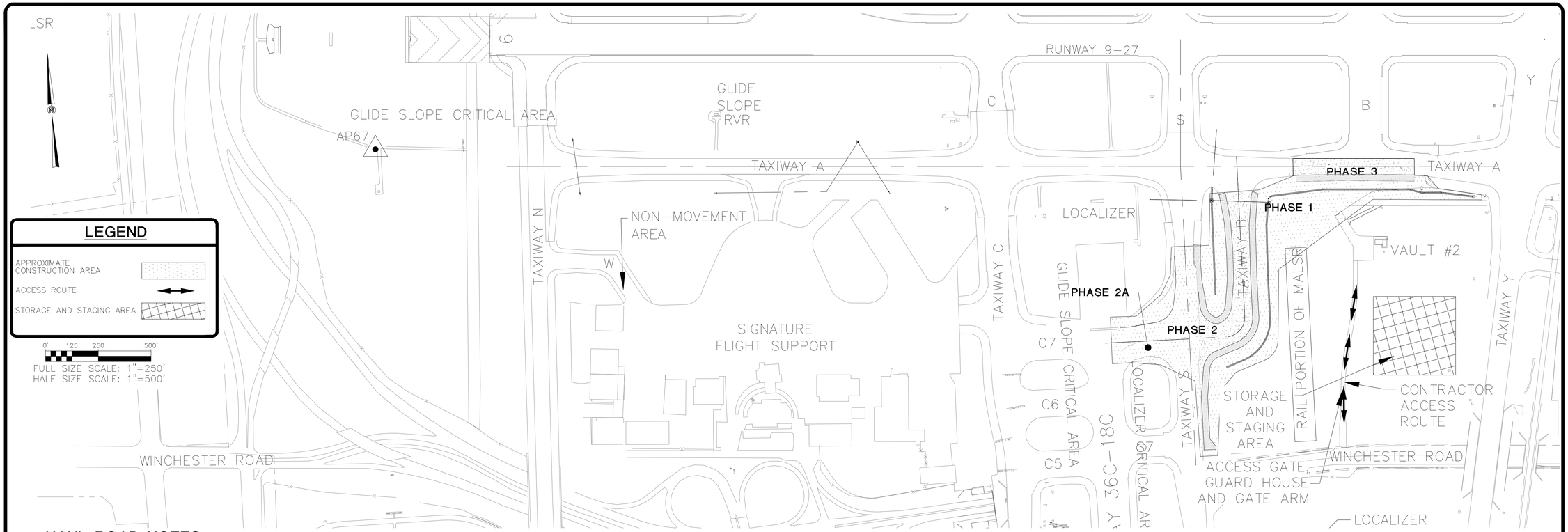

HAUL ROAD NOTES

1. HAUL ROADS TO BE USED UNDER THIS PROJECT SHALL BE THOSE INDICATED ON THE DRAWINGS OR OTHERWISE SPECIFICALLY AUTHORIZED BY THE PROGRAM MANAGER. IN GENERAL, THE CONTRACTOR SHALL CONFINE EQUIPMENT AND HAULING TO THE AREAS UNDER CONSTRUCTION. NO DEBRIS SHALL BE ALLOWED ON THE ROADWAYS OR AIRPORT PAVED SURFACES. ACTIVE TAXIWAYS AND RUNWAYS SHALL BE KEPT FREE OF DEBRIS AT ALL TIMES. CONTRACTOR SHALL MAINTAIN ONE POWER VACUUM SWEEPER ON SITE FOR EVERY ONE OF THE ACTIVE TAXIWAYS CROSSED. AN ADDITIONAL BACKUP SWEEPER IS REQUIRED AT THE DIRECTION OF THE PROGRAM MANAGER. OTHER PAVEMENTS SHALL BE CLEANED BY THE CONTRACTOR DAILY, AND AS REQUIRED, USING POWER VACUUM SWEEPERS AND HAND CLEANED TO KEEP ALL ACCESS AND CONSTRUCTION AREAS CLEAR OF SOILS, CLODS OR OTHER DEBRIS. SEE GENERAL NOTES AND OPERATIONAL NOTES FOR ADDITIONAL REQUIREMENTS.

2. THE ACCESS POINTS TO THE PROJECT SITE ARE SHOWN ON THE PLANS. THE SPECIFIED GATES SHALL BE MONITORED BY A MSCAA GUARD DURING ALL CONTRACTOR OPERATIONS WHILE THE GATE IS OPEN OR UNLOCKED.

3. THE CONTRACTOR, AT THEIR EXPENSE, SHALL BE RESPONSIBLE FOR RESTORING ALL AIRPORT SERVICE ROADS TO THEIR PRE-CONSTRUCTION CONDITION WHERE SUCH ROADS ARE USED BY THE CONTRACTOR, EXCEPT FOR THE ROADS APPROVED FOR USE AS HAUL ROUTES BY THE PROGRAM MANAGER WHICH WILL BE PAID FOR UNDER ALLOWANCE.

4. THE CONTRACTOR SHALL RESTORE ALL TURFED AND PAVED AREAS USED FOR HAUL ROADS TO THEIR ORIGINAL CONDITION, INCLUDING THE PLACEMENT OF SOD. ALL HAULING ALONG OR CROSSING THE AIRPORT AND PUBLIC ROADS SHALL BE ACCOMPLISHED BY THE CONTRACTOR. ALL COSTS FOR CONSTRUCTING, REMOVING AND RESTORING OF HAUL ROADS REQUIRED FOR THE COMPLETION OF THE WORK SHALL BE BORNE BY THE CONTRACTOR. CONTRACTOR TO PROVIDE MEASURES TO MAINTAIN EXISTING DRAINAGE PATTERNS ASSOCIATED WITH HAUL ROADS.

5. THE CONTRACTOR SHALL NOT PERMIT ANY UNAUTHORIZED CONSTRUCTION PERSONNEL OR TRAFFIC ON THE SITE. THE CONTRACTOR SHALL BE RESPONSIBLE FOR TRAFFIC CONTROL TO AND FROM THE VARIOUS CONSTRUCTION AREAS ON THE SITE. THE CONTRACTOR IS RESPONSIBLE FOR THE IMMEDIATE CLEANUP OF ANY DEBRIS DEPOSITED AT THE PROJECT SITE AND ALONG ANY ROAD AS A RESULT OF HIS/HER CONSTRUCTION TRAFFIC. DIRECTIONAL SIGNAGE AT THE ACCESS GATE AND ALONG THE DELIVERY ROUTE TO THE STORAGE AREA OR WORK SITE SHALL BE APPROVED BY THE PROGRAM MANAGER.

6. ALL CONTRACTOR'S MATERIAL ORDERS FOR DELIVERY TO THE SITE SHALL BE DIRECTED BY THE CONTRACTOR TO THE ACCESS POINTS IDENTIFIED.

7. THE LIMITS OF CONSTRUCTION, MATERIAL STORAGE AREAS, EQUIPMENT STORAGE AREA, PARKING AREA AND OTHER AREAS REQUIRED FOR THE CONTRACTOR'S EXCLUSIVE USE DURING CONSTRUCTION ARE SHOWN ON THE PLANS. ADDITIONAL AREAS MAY BE REQUESTED BY THE CONTRACTOR AND APPROVED BY THE PROGRAM MANAGER. THE CONTRACTOR SHALL PROVIDE DEVICES VISIBLE FOR BOTH DAY/NIGHT USE TO DELINEATE THE PERIMETER OF ALL SUCH AREAS.

8. THE CONTRACTOR, THROUGH THE CONSTRUCTION SECURITY OFFICER, SHALL ESTABLISH AND MAINTAIN A LIST OF CONTRACTOR AND SUB-CONTRACTOR VEHICLES AUTHORIZED TO OPERATE ON THE SITE. VEHICLE PERMITS SHALL BE ASSIGNED IN ACCORDANCE WITH AIRPORT SECURITY PROCEDURES.

9. IT SHALL BE THE CONTRACTOR'S RESPONSIBILITY TO COORDINATE OFF-SITE ROUTES (STATE HIGHWAYS, COUNTY ROADS OR CITY STREETS) WITH THE APPROPRIATE OWNER WHO HAS JURISDICTION OVER THE AFFECTED ROUTE. ON-SITE HAUL ROUTES SHALL BE MAINTAINED BY THE CONTRACTOR AND SHALL BE RESTORED TO THEIR ORIGINAL CONDITION UPON COMPLETION OF BEING USED AS A HAUL ROUTE.

10. WHILE ON THE AIRPORT, ALL CONTRACTOR VEHICLES AND TRAFFIC SHALL REMAIN WITHIN THE DESIGNATED CONSTRUCTION AREAS, STAGING AREAS OR HAUL ROUTES.

11. ALL CONTRACTOR VEHICLES SHALL DISPLAY IN FULL VIEW COMPANY LOGOS CONSPICUOUSLY PLACED ON EACH SIDE OF THE VEHICLE IN CONFORMANCE TO SC-240. ALL VEHICLES OPERATING OUTSIDE THE CONSTRUCTION BARRIER FENCE AND IN THE ACTIVE AOA SHALL BE EQUIPPED WITH A FLASHING AMBER (YELLOW) DOME-TYPE LIGHT MOUNTED ON TOP OF THE VEHICLE AND OF SUCH INTENSITY TO CONFORM TO AIRPORT CODES FOR MAINTENANCE AND EMERGENCY VEHICLES.

12. NO CONTRACTOR VEHICLES ARE TO CROSS ACTIVE RUNWAYS, TAXIWAYS AND APPROACH CLEAR ZONES UNLESS THE ESCORT IS UNDER THE DIRECT CONTROL OF THE AIRPORT GROUND CONTROLLER. IT SHALL BE UNDERSTOOD BY THE CONTRACTOR THAT AIRPORT TRAFFIC ON RUNWAYS, TAXIWAYS AND APRONS SHALL HAVE PRIORITY OVER CONTRACTOR'S VEHICLES.

13. PRIOR TO OPENING FOR AIRCRAFT USE, THE CONTRACTOR WILL HAVE READY FOR AIRCRAFT OPERATIONS AND ALLOW ADEQUATE TIME FOR INSPECTION BY AIRPORT OPERATIONS ANY RUNWAY, TAXIWAY OR APRON THAT HAS BEEN CLOSED FOR WORK, OR THAT HAS BEEN USED FOR A CROSSING POINT OR HAUL ROUTE BY THE CONTRACTOR. NO BARRICADES SHALL BE REMOVED UNTIL THE INSPECTION BY AIRPORT OPERATIONS IS COMPLETE AND ACCEPTED.

TEMPORARY GUARD HOUSE NOTES:

1. CONTRACTOR SHALL PROVIDE A TEMPORARY CONTRACTOR-FURNISHED GUARD HOUSE AT ALL CONSTRUCTION ACCESS GATES ENTERING THE AOA SECURE AREA. CONTRACTOR SHALL BE RESPONSIBLE FOR MAINTAINING THE GUARD HOUSE FOR THE DURATION OF THE PROJECT. THE CONTRACTOR WILL PROVIDE A PORTABLE TOILET FACILITY AT EACH LOCATION FOR THE EXCLUSIVE USE OF THE GATE GUARD AT NO ADDITIONAL COST TO THE OWNER. TRASH SHALL BE REMOVED DAILY AND GUARD HOUSE CLEANED WEEKLY WITH NO DIRECT PAYMENT. THIS WORK SHALL BE INCIDENTAL TO PAY ITEM S-100-6.2.

2. ALL EQUIPMENT SHALL BE SUBMITTED TO THE PROGRAM MANAGER FOR APPROVAL BY AIRPORT SECURITY PRIOR TO INSTALLATION AND OPERATION. CONTACT AIRPORT SECURITY (901) 922-8021 FOR DETAILED SPECIFICATIONS OF THE ABOVE EQUIPMENT.

3. ALL PERSONNEL ALLOWED PAST THE GUARD HOUSE SHALL BE PROPERLY BADGED BY THE OWNER'S SECURITY DEPARTMENT FOR ACCESS ONTO THE AOA AREA UNLESS ESCORTED PER MSCAA REQUIREMENTS. ACCESS WILL BE DENIED IF NOT PROPERLY BADGED.

TEMPORARY CONSTRUCTION FLAGGERS:

1. IF NEEDED, CONTRACTOR SHALL PROVIDE A FLAGGER ON EACH SIDE OF ACTIVE TAXIWAY CROSSINGS.

2. THE CONTRACTOR SHALL INSTALL THE FOLLOWING SIGNS:
   a. "STOP – WAIT UNTIL TRAFFIC IS CLEAR", 25' PRIOR TO THE CROSSING.
   b. "STOP SIGN" AT LOCATION OF FLAGGER.
   c. "WAIT UNTIL CLEARANCE IS GIVEN BEFORE PROCEEDING – NO TAILGATING" AT LOCATION OF FLAGGER.

3. PAYMENT FOR THESE ITEMS SHALL BE INCIDENTAL TO S-100-6.7.

CONTRACTOR STAGING AREA NOTES

1. CONTRACTOR SHALL INSTALL A MINIMUM 3" THICK GRADED AND COMPACTED GRAVEL BED TO THE LIMITS OF ALL CONTRACTOR STAGING AREAS.

2. THE CONTRACTOR SHALL MAINTAIN EXISTING DRAINAGE PATTERNS AT THE STAGING AND STOCKPILE AREAS AND PROVIDE TEMPORARY ROUTING OF STORMWATER AROUND THESE AREAS.

3. THE CONTRACTOR SHALL INSTALL TEMPORARY SILT FENCE AROUND THE STAGING AND STOCKPILE AREAS PER DETAIL 2 ON SHEET C-GR-09.

4. CONTRACTOR SHALL PROVIDE A STONE STABILIZED BASE UNDER MATERIAL STOCKPILE LOCATIONS. NO DIRECT PAY

5. ANY AND ALL REQUIRED UTILITIES FOR THE CONTRACTOR'S OPERATIONS SHALL BE ARRANGED FOR AND PAID FOR BY THE CONTRACTOR DIRECTLY WITH THE APPROPRIATE UTILITY. UTILITY ARRANGEMENTS SHALL BE SUBJECT TO THE APPROVAL OF THE PROGRAM MANAGER.

6. THE CONTRACTOR SHALL COMPLETE CLEAN UP AND RESTORATION OF THE STAGING AND STORAGE AREAS, AS APPROVED BY THE PROGRAM MANAGER WITHIN 15 DAYS OF CONTRACT COMPLETION DATE.

MEMPHIS - SHELBY COUNTY AIRPORT AUTHORITY
MEMPHIS INTERNATIONAL AIRPORT
2491 WINCHESTER RD. SUITE 113
MEMPHIS, TENNESSEE
38116-3856

PROGRAM MANAGER
PARSONS
Program Management Consultant
Parsons Transportation Group Inc.
Project Office:
4225 Airways Blvd.
Memphis TN, 38116
JOB NO.

Allen&Hoshall
engineers-architects-surveyors
1661 INTERNATIONAL DRIVE
SUITE 100
MEMPHIS, TENNESSEE 38120
PHONE: 901-820-0820
FAX: 901-683-1001
JOB NO. 72198-B

ENGINEER-SUBCONSULTANT
POWERS HILL DESIGN
CIVIL ENGINEERING. CIVIL RESPONSIBILITY.
80 Monroe Avenue
Suite 420
Memphis, TN 38103
Tel: 901.543.8000
JOB NO.

DRAWN BY: RNP
CHECKED BY: HP
APPROVED BY: TG

WILLIAM T. GIBSON
REGISTERED ENGINEER
AGRICULTURE
No. 104251
STATE OF TENNESSEE
3/17/25

ISSUED FOR BID

NO.	DESCRIPTION	DATE	BY

REVISIONS

PROJECT:
TAXIWAY BRAVO RECONFIGURATION (HOT SPOT 1)

SHEET TITLE:
CONTRACTOR ACCESS ROUTES

MSCAA NO. 18-1413-02
DWG. FILE NAME G-PH-12.DWG
DATE 03/17/2025
DWG NO. G-PH-12
SCALE
SHEET NO. 12 of 73
FACILITY NO. NONE

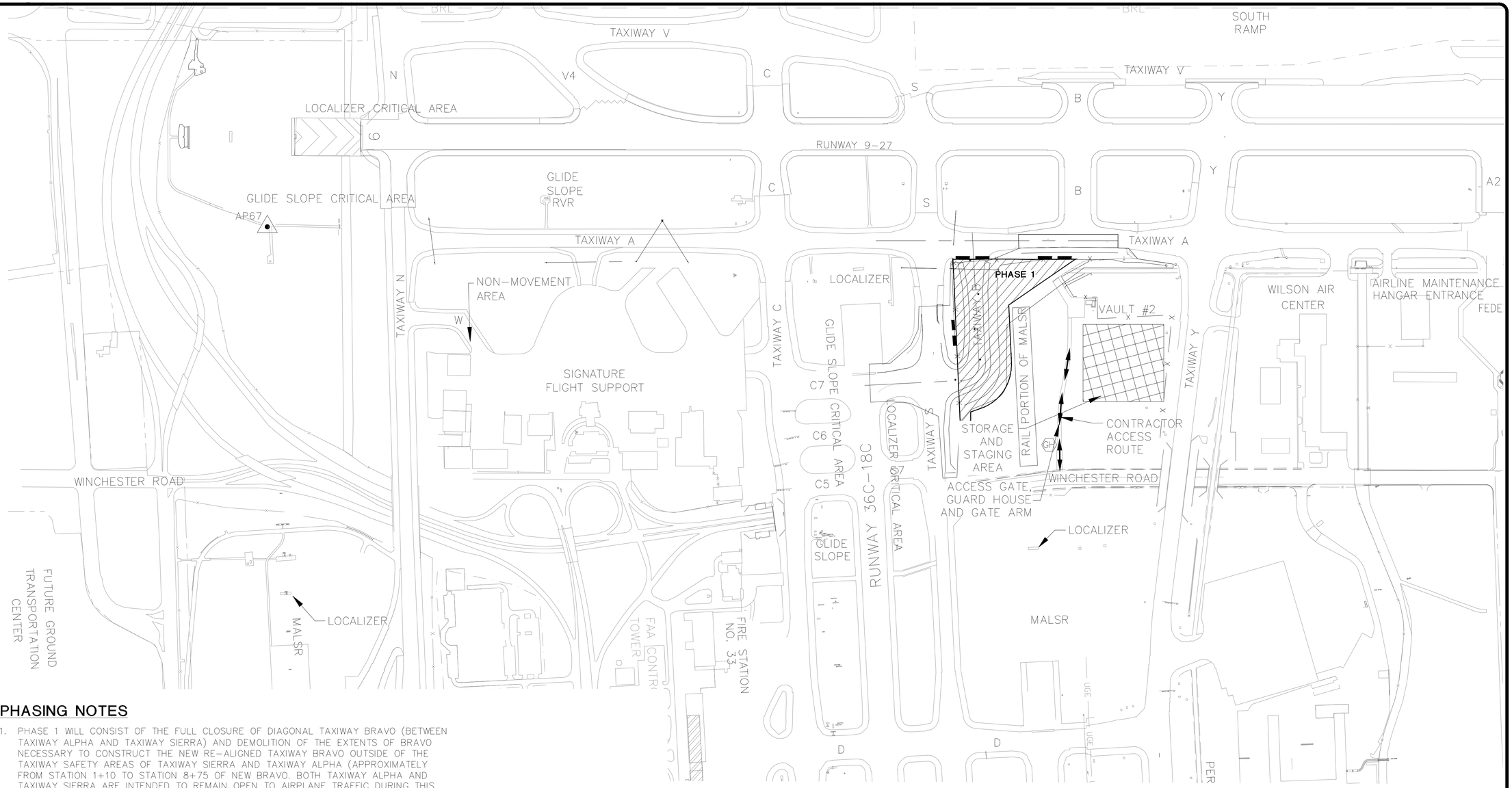

PHASING NOTES

1. PHASE 1 WILL CONSIST OF THE FULL CLOSURE OF DIAGONAL TAXIWAY BRAVO (BETWEEN TAXIWAY ALPHA AND TAXIWAY SIERRA) AND DEMOLITION OF THE EXTENTS OF BRAVO NECESSARY TO CONSTRUCT THE NEW RE-ALIGNED TAXIWAY BRAVO OUTSIDE OF THE TAXIWAY SAFETY AREAS OF TAXIWAY SIERRA AND TAXIWAY ALPHA (APPROXIMATELY FROM STATION 1+10 TO STATION 8+75 OF NEW BRAVO. BOTH TAXIWAY ALPHA AND TAXIWAY SIERRA ARE INTENDED TO REMAIN OPEN TO AIRPLANE TRAFFIC DURING THIS PHASE.
2. CONTRACTOR TO PROTECT ALL ITEMS NOT DESIGNATED FOR REMOVAL.
3. TAXIWAY GUIDANCE SIGNS AND LEAD-ON CENTERLINE AND EDGE STRIPING SHALL BE OBSCURED AND RESTORED FOR PHASE CONSTRUCTION AS REQUIRED BY PROGRAM MANAGER. ADDITIONALLY, A PAINTED YELLOW "X" SHALL BE PLACED ON THE REMAINING TAXIWAY BRAVO ENTRANCE PAVEMENT THAT LEADS TO THE CLOSED AREA BEING DEMOLISHED. NO SEPARATE PAYMENT SHALL BE MADE.

0' 150' 300' 600'
FULL SIZE SCALE: 1"=300'
HALF SIZE SCALE: 1"=600'

PHASE DURATIONS

PHASE 1 – NTP TO COMPLETION 120 CALENDAR DAYS.

LEGEND

CONSTRUCTION AREA	
STAGING AREA	
TYPE I BARRICADES	
PLASTIC SAFETY FENCE	—— x ——
HAUL ROUTE	↔
GUARD HOUSE	GH

MEMPHIS - SHELBY COUNTY AIRPORT AUTHORITY
MEMPHIS INTERNATIONAL AIRPORT
2491 WINCHESTER RD. SUITE 113
MEMPHIS, TENNESSEE
38116-3856

PROGRAM MANAGER
PARSONS
Program Management Consultant
Parsons Transportation Group Inc.
Project Office:
4225 Airways Blvd.
Memphis TN, 38116
JOB NO.

Allen&Hoshall
engineers-architects-surveyors
1661 INTERNATIONAL DRIVE
SUITE 100
MEMPHIS, TENNESSEE 38120
PHONE: 901-820-0820
FAX: 901-683-1001
JOB NO. 72198-B

ENGINEER-SUBCONSULTANT
POWERS HILL DESIGN
CIVIL ENGINEERING. CIVIL RESPONSIBILITY.
80 Monroe Avenue
Suite 420
Memphis, TN 38103
Tel: 901.543.8000
JOB NO.

DRAWN BY: RNP
CHECKED BY: HP
APPROVED BY: TG

WILLIAM T. GIBSON REGISTERED ENGINEER AGRICULTURE No. 104251 STATE OF TENNESSEE 3/13/25

ISSUED FOR BID

NO.	DESCRIPTION	DATE	BY

REVISIONS

PROJECT:
TAXIWAY BRAVO RECONFIGURATION (HOT SPOT 1)

SHEET TITLE:
PHASING PLAN PHASE 1

MSCAA NO. 18-1413-02
DWG. FILE NAME G-PH-13.DWG
DATE 03/17/2025
DWG NO. G-PH-13
SCALE
SHEET NO. 13 of 73
FACILITY NO. NONE

Drawing name: \\Ahmem03\72198-b\18-1413-02\DRAWINGS\G-PH-13.dwg 22x34 May 28, 2025 10:36am by: nparris

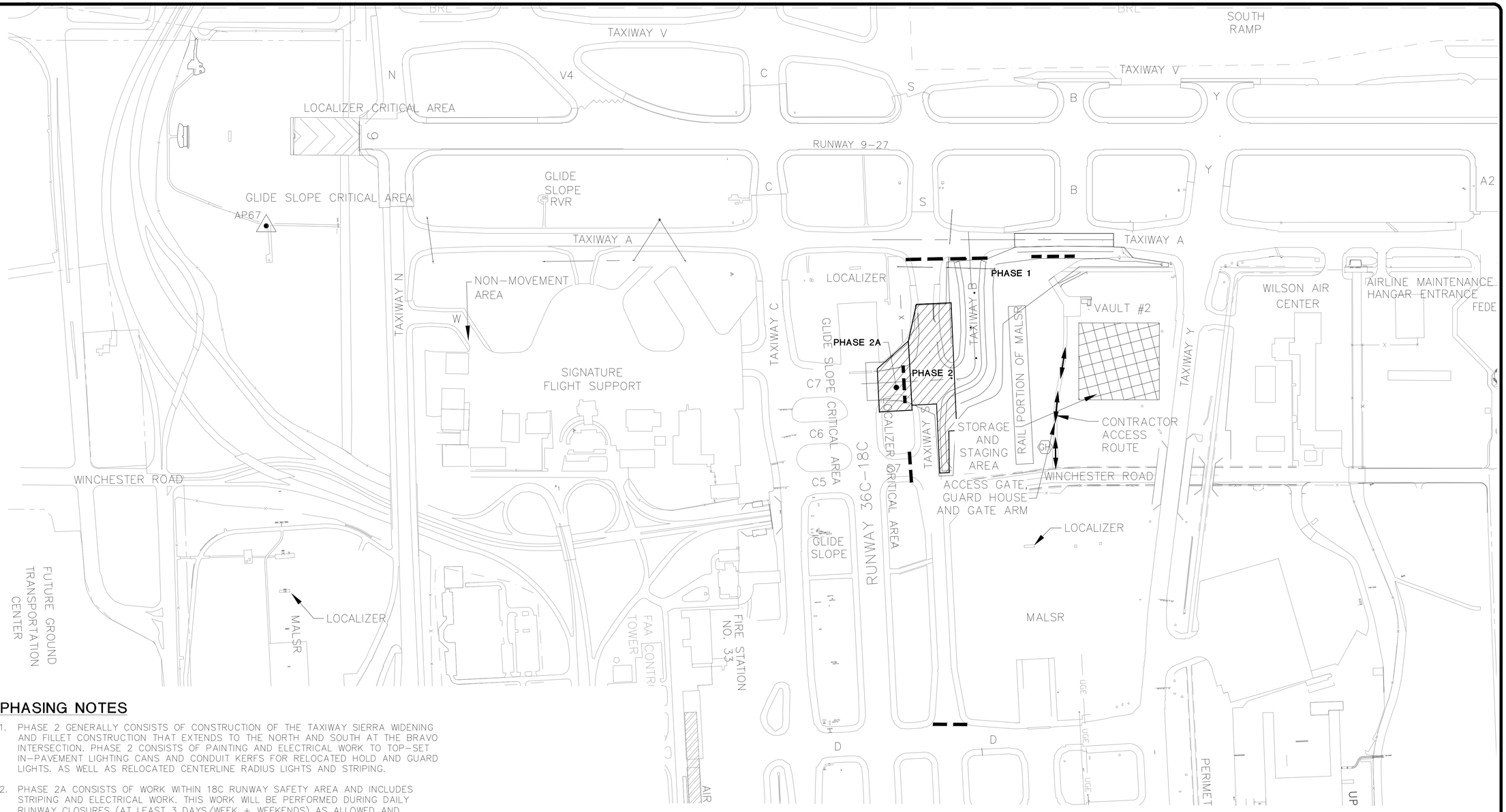

PHASING NOTES

1. PHASE 2 GENERALLY CONSISTS OF CONSTRUCTION OF THE TAXIWAY SIERRA WIDENING AND FILLET CONSTRUCTION THAT EXTENDS TO THE NORTH AND SOUTH AT THE BRAVO INTERSECTION. PHASE 2 CONSISTS OF PAINTING AND ELECTRICAL WORK TO TOP-SET IN-PAVEMENT LIGHTING CANS AND CONDUIT KERFS FOR RELOCATED HOLD AND GUARD LIGHTS. AS WELL AS RELOCATED CENTERLINE RADIUS LIGHTS AND STRIPING.
2. PHASE 2A CONSISTS OF WORK WITHIN 18C RUNWAY SAFETY AREA AND INCLUDES STRIPING AND ELECTRICAL WORK. THIS WORK WILL BE PERFORMED DURING DAILY RUNWAY CLOSURES (AT LEAST 3 DAYS/WEEK + WEEKENDS) AS ALLOWED AND COORDINATED WITH MEM OPS. ALL EQUIPMENT WILL NEED TO BE REMOVED DAILY.
3. TAXIWAY SIERRA, AS WELL AS OLD/NEW TAXIWAY BRAVO, WILL BE CLOSED DURING THIS PHASE. TAXIWAY ALPHA WILL REMAIN OPEN TO AIRCRAFT TRAFFIC DURING THIS PHASE.
4. CONTRACTOR TO PROTECT ALL ITEMS NOT DESIGNATED FOR REMOVAL.
5. TAXIWAY GUIDANCE SIGNS SHALL BE OBSCURED AND RESTORED FOR PHASE CONSTRUCTION AS REQUIRED BY PROGRAM MANAGER. NO SEPARATE PAYMENT SHALL BE MADE.

PHASE DURATIONS

PHASE 2 – NTP TO COMPLETION 90 CALENDAR DAYS.

PHASE 2A – CONCURRENT PHASE WITHIN PHASE 2 THAT WILL BE COMPLETED ENTIRELY WITHIN THE TIME LIMITS OF PHASE 2. THIS WORK WILL BE PERFORMED DURING DAILY RUNWAY CLOSURES..THE HOURS OF CLOSURES WILL GENERALLY BE 0700-1430, 3 DAYS PER WEEK AND WEEKENDS CONCURRENT WITH ADJACENT PHASE.

0' 150' 300' 600'
FULL SIZE SCALE: 1"=300'
HALF SIZE SCALE: 1"=600'

LEGEND

- CONSTRUCTION AREA
- STAGING AREA
- TYPE I BARRICADES
- PLASTIC SAFETY FENCE
- HAUL ROUTE
- GUARD HOUSE

MEMPHIS - SHELBY COUNTY AIRPORT AUTHORITY
MEMPHIS INTERNATIONAL AIRPORT
2491 WINCHESTER RD. SUITE 113
MEMPHIS, TENNESSEE
38116-3856

PROGRAM MANAGER
PARSONS
Program Management Consultant
Parsons Transportation Group Inc.
Project Office:
4225 Airways Blvd.
Memphis TN, 38116
JOB NO.

Allen&Hoshall
engineers-architects-surveyors
1661 INTERNATIONAL DRIVE
SUITE 100
MEMPHIS, TENNESSEE 38120
PHONE: 901-820-0820
FAX: 901-683-1001
JOB NO. 72198-B

ENGINEER-SUBCONSULTANT
POWERS HILL DESIGN
CIVIL ENGINEERING. CIVIL RESPONSIBILITY.
80 Monroe Avenue
Suite 420
Memphis, TN 38103
Tel: 901.543.8000
JOB NO.

DRAWN BY: RNP
CHECKED BY: HP
APPROVED BY: TG

WILLIAM T. GIBSON REGISTERED ENGINEER AGRICULTURE No. 104251 STATE OF TENNESSEE 3/13/25

ISSUED FOR BID

NO.	DESCRIPTION	DATE	BY

REVISIONS

PROJECT:
TAXIWAY BRAVO RECONFIGURATION (HOT SPOT 1)

SHEET TITLE:
PHASING PLAN PHASE 2

MSCAA NO. 18-1413-02
DWG. FILE NAME G-PH-14.DWG
DATE 03/17/2025
DWG NO. G-PH-14
SCALE
SHEET NO. 14 of 73
FACILITY NO. NONE

Drawing name: \\Ahmem03\72198-b\18-1413-02\DRAWINGS\G-PH-14.dwg 22x34 May 28, 2025 10:37am by: nparris

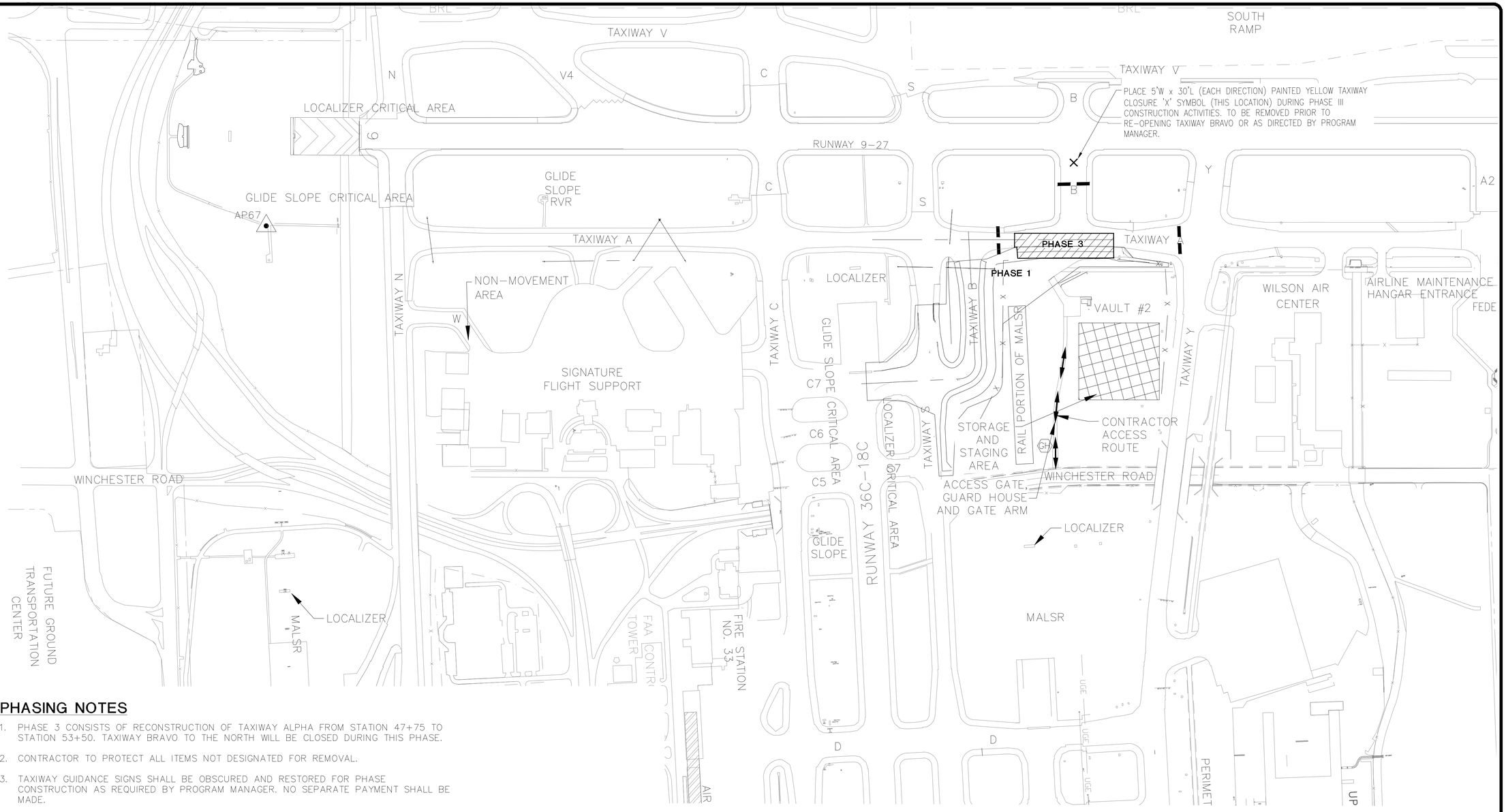

PHASING NOTES

1. PHASE 3 CONSISTS OF RECONSTRUCTION OF TAXIWAY ALPHA FROM STATION 47+75 TO STATION 53+50. TAXIWAY BRAVO TO THE NORTH WILL BE CLOSED DURING THIS PHASE.
2. CONTRACTOR TO PROTECT ALL ITEMS NOT DESIGNATED FOR REMOVAL.
3. TAXIWAY GUIDANCE SIGNS SHALL BE OBSCURED AND RESTORED FOR PHASE CONSTRUCTION AS REQUIRED BY PROGRAM MANAGER. NO SEPARATE PAYMENT SHALL BE MADE.

0' 150' 300' 600'
FULL SIZE SCALE: 1"=300'
HALF SIZE SCALE: 1"=600'

PHASE DURATIONS

PHASE 3 – NTP TO COMPLETION 60 CALENDAR DAYS..

LEGEND

CONSTRUCTION AREA	
STAGING AREA	
TYPE I BARRICADES	
PLASTIC SAFETY FENCE	—— x ——
HAUL ROUTE	⟷
GUARD HOUSE	GH

MEMPHIS - SHELBY COUNTY AIRPORT AUTHORITY
MEMPHIS INTERNATIONAL AIRPORT
2491 WINCHESTER RD. SUITE 113
MEMPHIS, TENNESSEE
38116-3856

PROGRAM MANAGER
PARSONS
Program Management Consultant
Parsons Transportation Group Inc.
Project Office:
4225 Airways Blvd.
Memphis TN, 38116
JOB NO.

Allen&Hoshall
engineers-architects-surveyors
1661 INTERNATIONAL DRIVE
SUITE 100
MEMPHIS, TENNESSEE 38120
PHONE: 901-820-0820
FAX: 901-683-1001
JOB NO. 72198-B

ENGINEER-SUBCONSULTANT
POWERS HILL DESIGN
CIVIL ENGINEERING. CIVIL RESPONSIBILITY.
80 Monroe Avenue
Suite 420
Memphis, TN 38103
Tel: 901.543.8000
JOB NO.

DRAWN BY: RNP
CHECKED BY: HP
APPROVED BY: TG

WILLIAM T. GIBSON REGISTERED ENGINEER AGRICULTURE No. 104251 STATE OF TENNESSEE 3/13/25

ISSUED FOR BID

NO.	DESCRIPTION	DATE	BY

REVISIONS

PROJECT:
TAXIWAY BRAVO RECONFIGURATION (HOT SPOT 1)

SHEET TITLE:
PHASING PLAN PHASE 3

MSCAA NO. 18-1413-02
DWG. FILE NAME G-PH-15.DWG
DATE 03/17/2025
DWG NO. G-PH-15
SCALE
SHEET NO. 15 of 73
FACILITY NO. NONE

Drawing name: \\Ahnmem03\72198-b\18-1413-02\DRAWINGS\G-PH-15.dwg 22x34 May 28, 2025 10:37am by: nparris

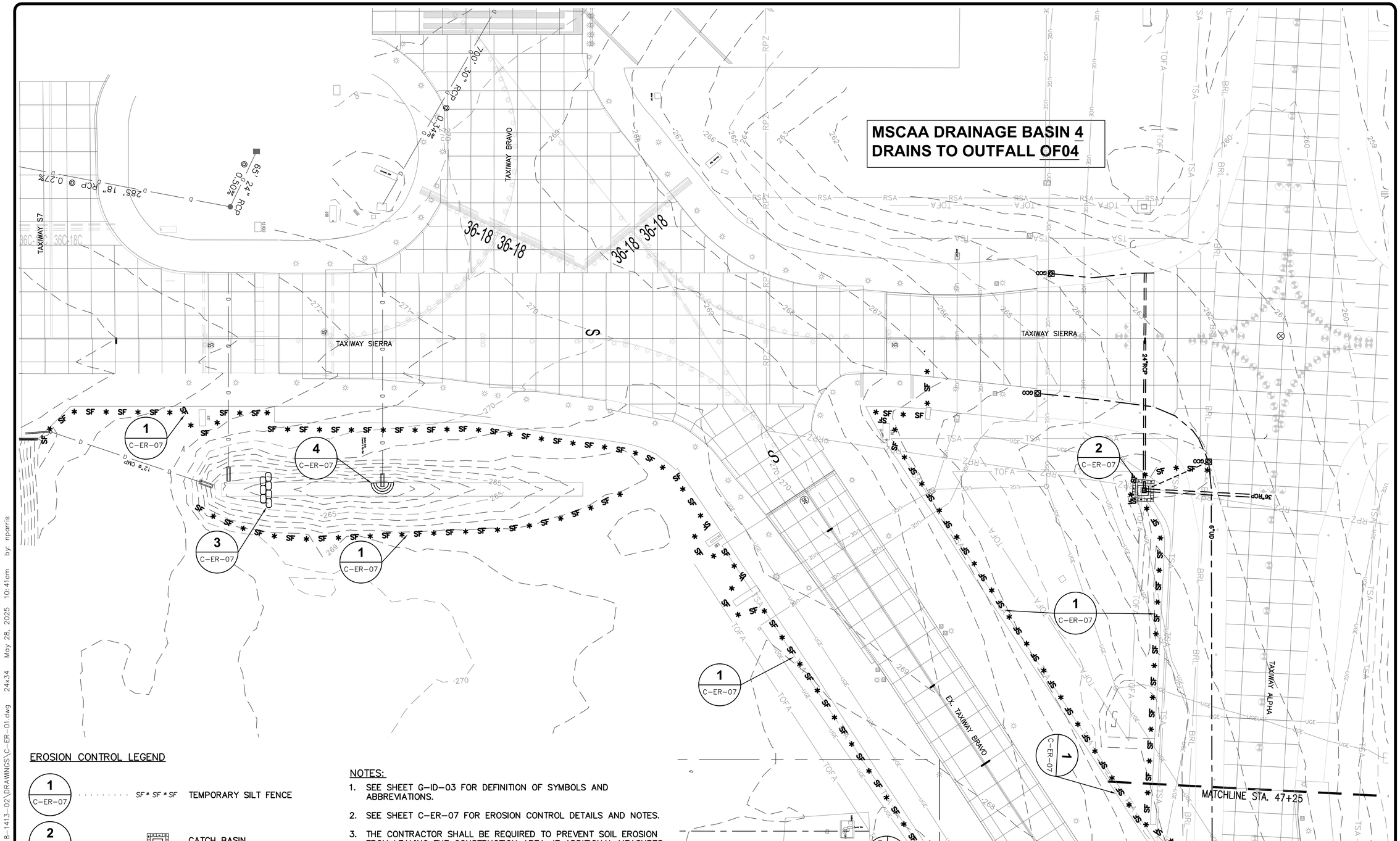

EROSION CONTROL LEGEND

1 / C-ER-07	SF * SF * SF	TEMPORARY SILT FENCE
2 / C-ER-07		CATCH BASIN SEDIMENT TRAP
3 / C-ER-07		FILTER SOCK CHECK DAM
4 / C-ER-07		CULVERT PROTECTION TYPE 1

NOTES:

1. SEE SHEET G-ID-03 FOR DEFINITION OF SYMBOLS AND ABBREVIATIONS.
2. SEE SHEET C-ER-07 FOR EROSION CONTROL DETAILS AND NOTES.
3. THE CONTRACTOR SHALL BE REQUIRED TO PREVENT SOIL EROSION FROM LEAVING THE CONSTRUCTION AREA. IF ADDITIONAL MEASURES, OTHER THAN THOSE SHOWN ON THE PLANS, ARE NEEDED, OBTAIN PROGRAM MANAGER'S APPROVAL PRIOR TO INSTALLATION.
4. CONTRACTOR SHALL REMOVE ALL SILT AND OTHER DEPOSITS IN THE SUBSURFACE DRAINAGE SYSTEM WHEN ACCUMULATION EXCEEDS 1/5 OF THE DIAMETER OF THE PIPES AND PRIOR TO ACCEPTANCE. NO DIRECT PAYMENT.
5. REMOVE EROSION CONTROL BARRIER AND INSTALL SILT FENCE ON BOTH SIDES OF PROPOSED SWALE AS SHOWN ON PLANS IMMEDIATELY PRIOR TO CONSTRUCTION OF CONCRETE SWALE.
6. INSTALL CATCH BASIN SEDIMENT TRAP IMMEDIATELY AFTER COMPLETION OF CATCH BASIN INSTALLATION.

0' 25' 50' 100'
FULL SIZE SCALE: 1"=50'
HALF SIZE SCALE: 1"=100'

KEYMAP

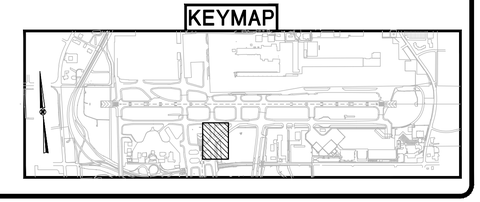

MEMPHIS - SHELBY COUNTY AIRPORT AUTHORITY
MEMPHIS INTERNATIONAL AIRPORT
2491 WINCHESTER RD. SUITE 113
MEMPHIS, TENNESSEE
38116-3856

PROGRAM MANAGER
PARSONS
Program Management Consultant
Parsons Transportation Group Inc.
Project Office:
4225 Airways Blvd.
Memphis TN, 38116
JOB NO.

Allen&Hoshall
engineers-architects-surveyors
1661 INTERNATIONAL DRIVE
SUITE 100
MEMPHIS, TENNESSEE 38120
PHONE: 901-820-0820
FAX: 901-683-1001
JOB NO. 72198-B

ENGINEER-SUBCONSULTANT
POWERS HILL DESIGN
CIVIL ENGINEERING. CIVIL RESPONSIBILITY.
80 Monroe Avenue
Suite 420
Memphis, TN 38103
Tel: 901.543.8000
JOB NO.

DRAWN BY: GD
CHECKED BY: SH
APPROVED BY: SH

STEVEN HILL
REGISTERED ENGINEER
AGENT
No. 16212
STATE OF TENNESSEE
03/17/25

ISSUED FOR BID

NO.	DESCRIPTION	DATE	BY

REVISIONS

PROJECT:
TAXIWAY BRAVO RECONFIGURATION (HOT SPOT 1)

SHEET TITLE:
EPSC PLAN-PHASE 1 TAXIWAY BRAVO STA. 0+17.89 TO STA. 9+24.90

MSCAA NO. 18-1413-02
DWG. FILE NAME C-ER-01.DWG
DATE 03/17/2025
DWG NO. C-ER-01
SCALE 1"=50'
SHEET NO. 16 of 73
FACILITY NO. NONE

Drawing name: \\Ahmem03\72198-b\18-1413-02\DRAWINGS\C-ER-01.dwg 24x34 May 28, 2025 10:41am by: nparris

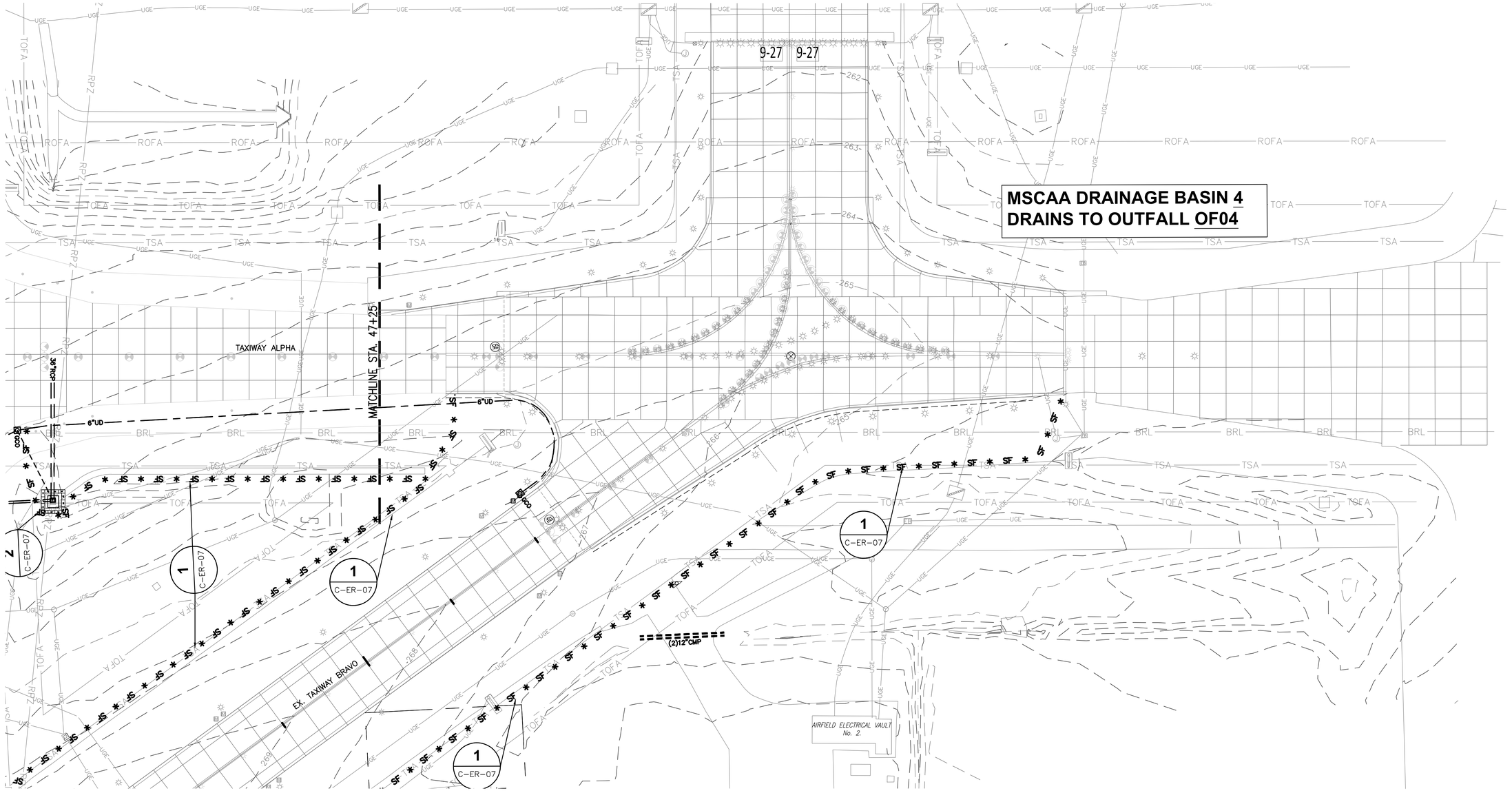

EROSION CONTROL LEGEND

1 / C-ER-07 . . . . . SF * SF * SF TEMPORARY SILT FENCE

0' 25' 50' 100'
FULL SIZE SCALE: 1"=50'
HALF SIZE SCALE: 1"=100'

NOTES:

1. SEE SHEET G-ID-03 FOR DEFINITION OF SYMBOLS AND ABBREVIATIONS.
2. SEE SHEET C-ER-07 FOR EROSION CONTROL DETAILS AND NOTES.
3. THE CONTRACTOR SHALL BE REQUIRED TO PREVENT SOIL EROSION FROM LEAVING THE CONSTRUCTION AREA. IF ADDITIONAL MEASURES, OTHER THAN THOSE SHOWN ON THE PLANS, ARE NEEDED, OBTAIN PROGRAM MANAGER'S APPROVAL PRIOR TO INSTALLATION.
4. CONTRACTOR SHALL REMOVE ALL SILT AND OTHER DEPOSITS IN THE SUBSURFACE DRAINAGE SYSTEM WHEN ACCUMULATION EXCEEDS 1/5 OF THE DIAMETER OF THE PIPES AND PRIOR TO ACCEPTANCE. NO DIRECT PAYMENT.
5. REMOVE EROSION CONTROL BARRIER AND INSTALL SILT FENCE ON BOTH SIDES OF PROPOSED SWALE AS SHOWN ON PLANS IMMEDIATELY PRIOR TO CONSTRUCTION OF CONCRETE SWALE.
6. INSTALL CATCH BASIN SEDIMENT TRAP IMMEDIATELY AFTER COMPLETION OF CATCH BASIN INSTALLATION.

KEYMAP

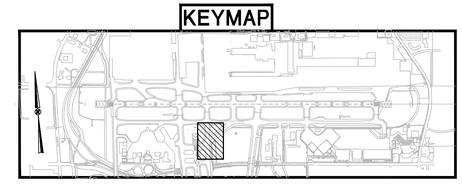

MEMPHIS - SHELBY COUNTY AIRPORT AUTHORITY
MEMPHIS INTERNATIONAL AIRPORT
2491 WINCHESTER RD. SUITE 113
MEMPHIS, TENNESSEE
38116-3856

PROGRAM MANAGER
PARSONS
Program Management Consultant
Parsons Transportation Group Inc.
Project Office:
4225 Airways Blvd.
Memphis TN, 38116
JOB NO.

Allen&Hoshall
engineers-architects-surveyors
1661 INTERNATIONAL DRIVE
SUITE 100
MEMPHIS, TENNESSEE 38120
PHONE: 901-820-0820
FAX: 901-683-1001
JOB NO. 72198-B

ENGINEER-SUBCONSULTANT
POWERS HILL DESIGN
CIVIL ENGINEERING. CIVIL RESPONSIBILITY.
80 Monroe Avenue
Suite 420
Memphis, TN 38103
Tel: 901.543.8000
JOB NO.

DRAWN BY: GD
CHECKED BY: SH
APPROVED BY: SH

STEVEN HILL
REGISTERED ENGINEER
AGENT
No. 115212
STATE OF TENNESSEE
03/17/25

ISSUED FOR BID

NO.	DESCRIPTION	DATE	BY

REVISIONS

PROJECT:
TAXIWAY BRAVO RECONFIGURATION (HOT SPOT 1)

SHEET TITLE:
EPSC PLAN-PHASE 1 TAXIWAY ALPHA STA. 47+25.00 TO STA. 53+50.00

MSCAA NO. 18-1413-02
DWG. FILE NAME C-ER-02.DWG
DATE 03/17/2025
DWG NO. C-ER-02
SCALE 1"=50'
SHEET NO. 17 of 73
FACILITY NO. NONE

Drawing name: \\Ahmem03\72198-b\18-1413-02\DRAWINGS\C-ER-02.dwg 24x34 May 28, 2025 10:41am by: nparris

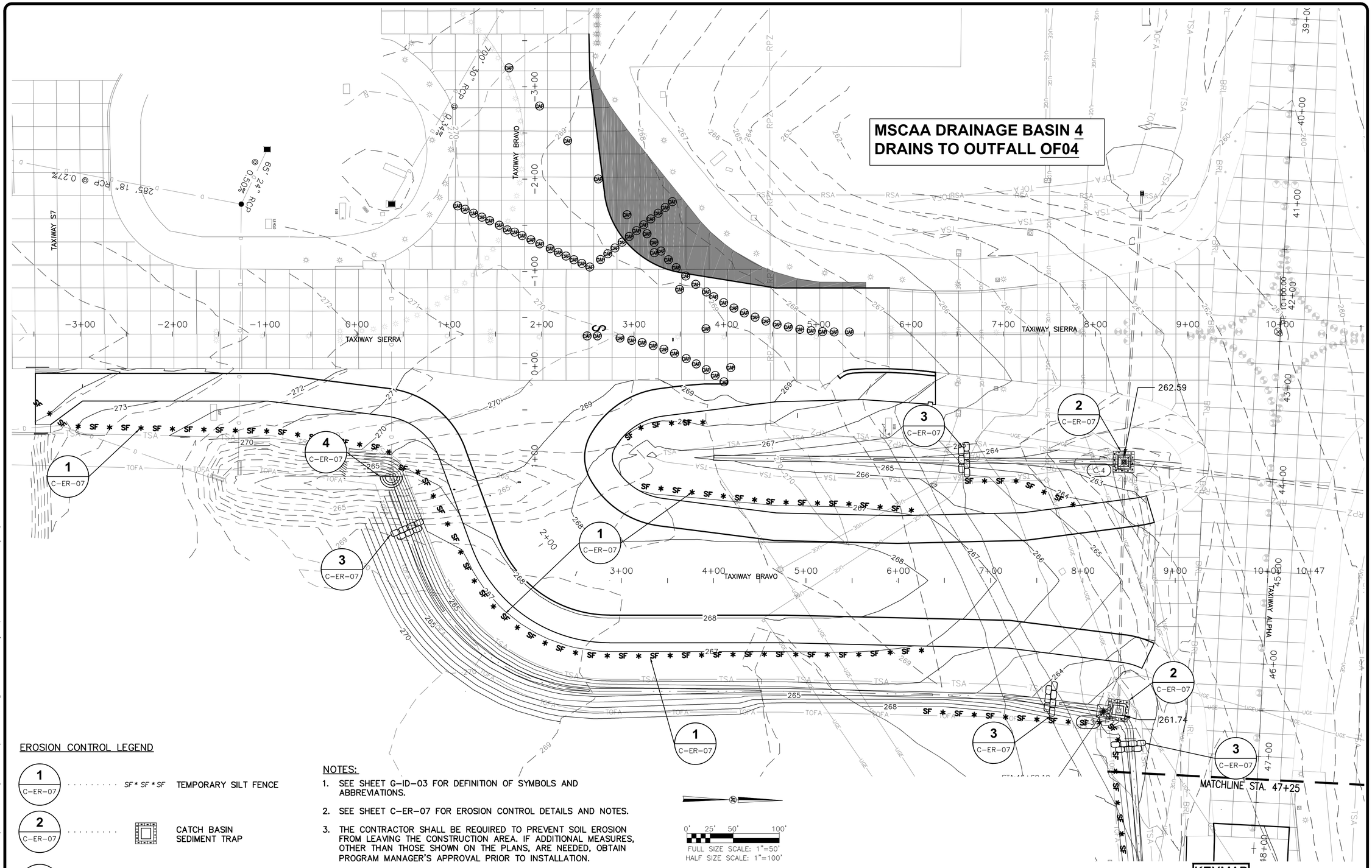

EROSION CONTROL LEGEND

1 / C-ER-07	SF * SF * SF	TEMPORARY SILT FENCE
2 / C-ER-07		CATCH BASIN SEDIMENT TRAP
3 / C-ER-07		FILTER SOCK CHECK DAM
4 / C-ER-07		CULVERT PROTECTION TYPE 1

NOTES:

1. SEE SHEET G-ID-03 FOR DEFINITION OF SYMBOLS AND ABBREVIATIONS.
2. SEE SHEET C-ER-07 FOR EROSION CONTROL DETAILS AND NOTES.
3. THE CONTRACTOR SHALL BE REQUIRED TO PREVENT SOIL EROSION FROM LEAVING THE CONSTRUCTION AREA. IF ADDITIONAL MEASURES, OTHER THAN THOSE SHOWN ON THE PLANS, ARE NEEDED, OBTAIN PROGRAM MANAGER'S APPROVAL PRIOR TO INSTALLATION.
4. CONTRACTOR SHALL REMOVE ALL SILT AND OTHER DEPOSITS IN THE SUBSURFACE DRAINAGE SYSTEM WHEN ACCUMULATION EXCEEDS 1/5 OF THE DIAMETER OF THE PIPES AND PRIOR TO ACCEPTANCE. NO DIRECT PAYMENT.
5. REMOVE EROSION CONTROL BARRIER AND INSTALL SILT FENCE ON BOTH SIDES OF PROPOSED SWALE AS SHOWN ON PLANS IMMEDIATELY PRIOR TO CONSTRUCTION OF CONCRETE SWALE.
6. INSTALL CATCH BASIN SEDIMENT TRAP IMMEDIATELY AFTER COMPLETION OF CATCH BASIN INSTALLATION.

0' 25' 50' 100'
FULL SIZE SCALE: 1"=50'
HALF SIZE SCALE: 1"=100'

KEYMAP

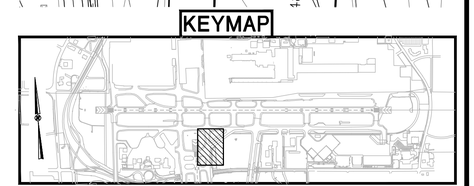

MEMPHIS - SHELBY COUNTY AIRPORT AUTHORITY
MEMPHIS INTERNATIONAL AIRPORT
2491 WINCHESTER RD. SUITE 113
MEMPHIS, TENNESSEE
38116-3856

PROGRAM MANAGER
PARSONS
Program Management Consultant
Parsons Transportation Group Inc.
Project Office:
4225 Airways Blvd.
Memphis TN, 38116
JOB NO.

Allen&Hoshall
engineers-architects-surveyors
1661 INTERNATIONAL DRIVE
SUITE 100
MEMPHIS, TENNESSEE 38120
PHONE: 901-820-0820
FAX: 901-683-1001
JOB NO. 72198-B

ENGINEER-SUBCONSULTANT
POWERS HILL DESIGN
CIVIL ENGINEERING. CIVIL RESPONSIBILITY.
80 Monroe Avenue
Suite 420
Memphis, TN 38103
Tel: 901.543.8000
JOB NO.

DRAWN BY: GD
CHECKED BY: SH
APPROVED BY: SH

STEVEN HILL
REGISTERED ENGINEER
AGENT
No. 115212
STATE OF TENNESSEE
03/17/25

ISSUED FOR BID

NO.	DESCRIPTION	DATE	BY

REVISIONS

PROJECT:
TAXIWAY BRAVO RECONFIGURATION (HOT SPOT 1)

SHEET TITLE:
EPSC PLAN-PHASE 2 TAXIWAY BRAVO STA. 0+17.89 TO STA. 9+24.90

MSCAA NO. 18-1413-02
DWG. FILE NAME C-ER-03.DWG
DATE 03/17/2025
DWG NO. C-ER-03
SCALE 1"=50'
SHEET NO. 18 of 73
FACILITY NO. NONE

Drawing name: \\Ahmem03\72198-b\18-1413-02\DRAWINGS\C-ER-03.dwg 24x34 May 28, 2025 10:42am by: nparris

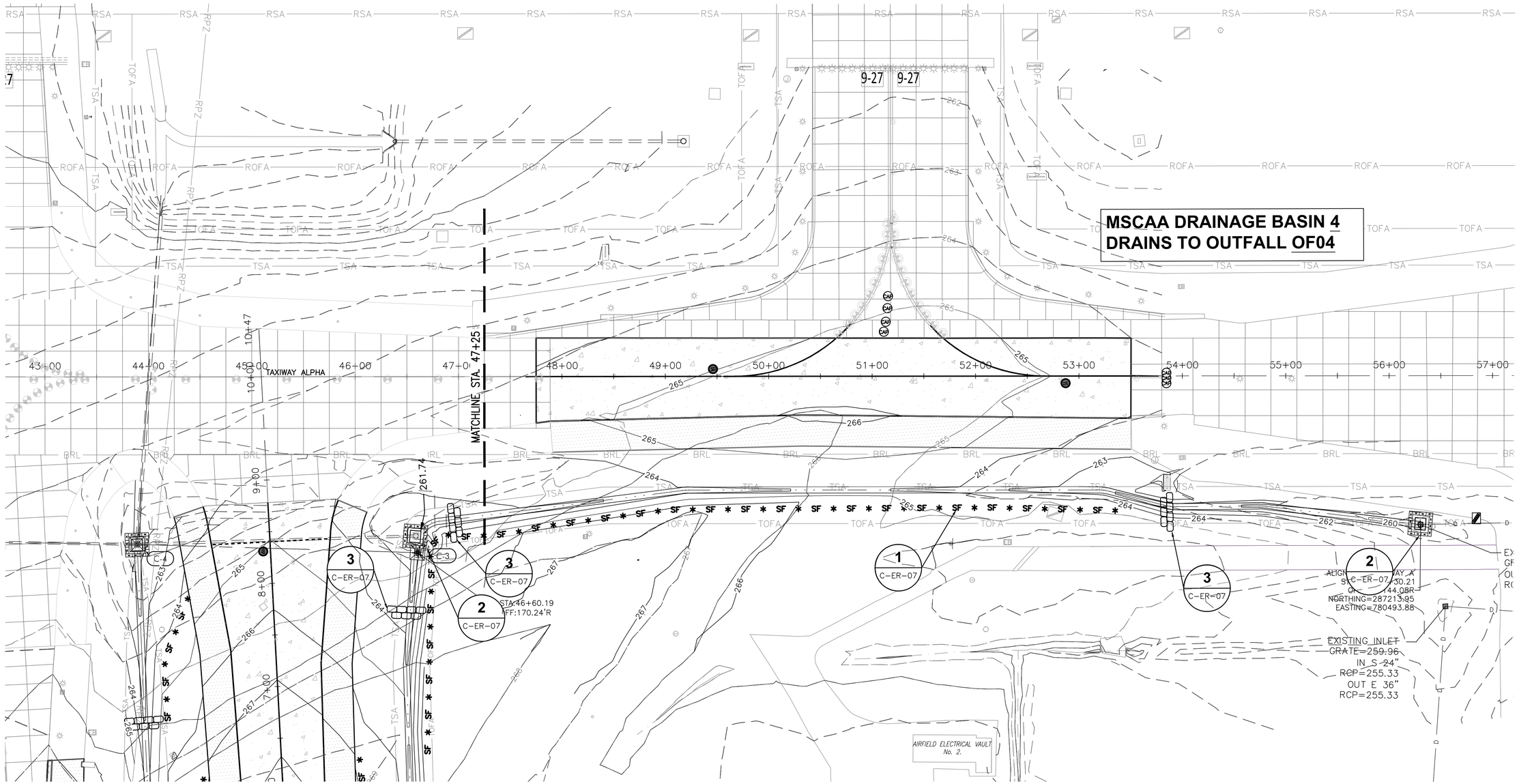

EROSION CONTROL LEGEND

1 / C-ER-19	SF * SF * SF	TEMPORARY SILT FENCE
2 / C-ER-19		CATCH BASIN SEDIMENT TRAP
3 / C-ER-19		FILTER SOCK CHECK DAM

0' 25' 50' 100'
FULL SIZE SCALE: 1"=50'
HALF SIZE SCALE: 1"=100'

NOTES:

1. SEE SHEET G-ID-03 FOR DEFINITION OF SYMBOLS AND ABBREVIATIONS.
2. SEE SHEET C-ER-07 FOR EROSION CONTROL DETAILS AND NOTES.
3. THE CONTRACTOR SHALL BE REQUIRED TO PREVENT SOIL EROSION FROM LEAVING THE CONSTRUCTION AREA. IF ADDITIONAL MEASURES, OTHER THAN THOSE SHOWN ON THE PLANS, ARE NEEDED, OBTAIN PROGRAM MANAGER'S APPROVAL PRIOR TO INSTALLATION.
4. CONTRACTOR SHALL REMOVE ALL SILT AND OTHER DEPOSITS IN THE SUBSURFACE DRAINAGE SYSTEM WHEN ACCUMULATION EXCEEDS 1/5 OF THE DIAMETER OF THE PIPES AND PRIOR TO ACCEPTANCE. NO DIRECT PAYMENT.
5. REMOVE EROSION CONTROL BARRIER AND INSTALL SILT FENCE ON BOTH SIDES OF PROPOSED SWALE AS SHOWN ON PLANS IMMEDIATELY PRIOR TO CONSTRUCTION OF CONCRETE SWALE.
6. INSTALL CATCH BASIN SEDIMENT TRAP IMMEDIATELY AFTER COMPLETION OF CATCH BASIN INSTALLATION.

KEYMAP

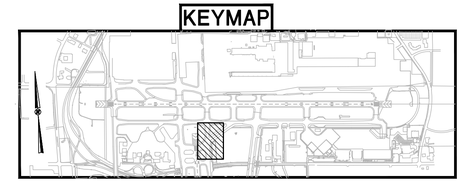

MEMPHIS - SHELBY COUNTY AIRPORT AUTHORITY
MEMPHIS INTERNATIONAL AIRPORT
2491 WINCHESTER RD. SUITE 113
MEMPHIS, TENNESSEE
38116-3856

PROGRAM MANAGER
PARSONS
Program Management Consultant
Parsons Transportation Group Inc.
Project Office:
4225 Airways Blvd.
Memphis TN, 38116
JOB NO.

Allen&Hoshall
engineers-architects-surveyors
1661 INTERNATIONAL DRIVE
SUITE 100
MEMPHIS, TENNESSEE 38120
PHONE: 901-820-0820
FAX: 901-683-1001
JOB NO. 72198-B

ENGINEER-SUBCONSULTANT
POWERS HILL DESIGN
CIVIL ENGINEERING. CIVIL RESPONSIBILITY.
80 Monroe Avenue
Suite 420
Memphis, TN 38103
Tel: 901.543.8000
JOB NO.

DRAWN BY: GD
CHECKED BY: SH
APPROVED BY: SH

STEVEN HILL
REGISTERED ENGINEER
AGRICULTURE
No. 115212
STATE OF TENNESSEE
03/17/25

ISSUED FOR BID

NO.	DESCRIPTION	DATE	BY

REVISIONS

PROJECT:
TAXIWAY BRAVO RECONFIGURATION (HOT SPOT 1)

SHEET TITLE:
EPSC PLAN-PHASE 2 TAXIWAY ALPHA STA. 47+25.00 TO STA. 53+50.00

MSCAA NO. 18-1413-02
DWG. FILE NAME C-ER-04.DWG
DATE 03/17/2025
DWG NO. C-ER-04
SCALE 1"=50'
SHEET NO. 19 of 73
FACILITY NO. NONE

Drawing name: \\Ahmem03\72198-b\18-1413-02\DRAWINGS\C-ER-04.dwg 24X34 May 28, 2025 10:42am by: nparris

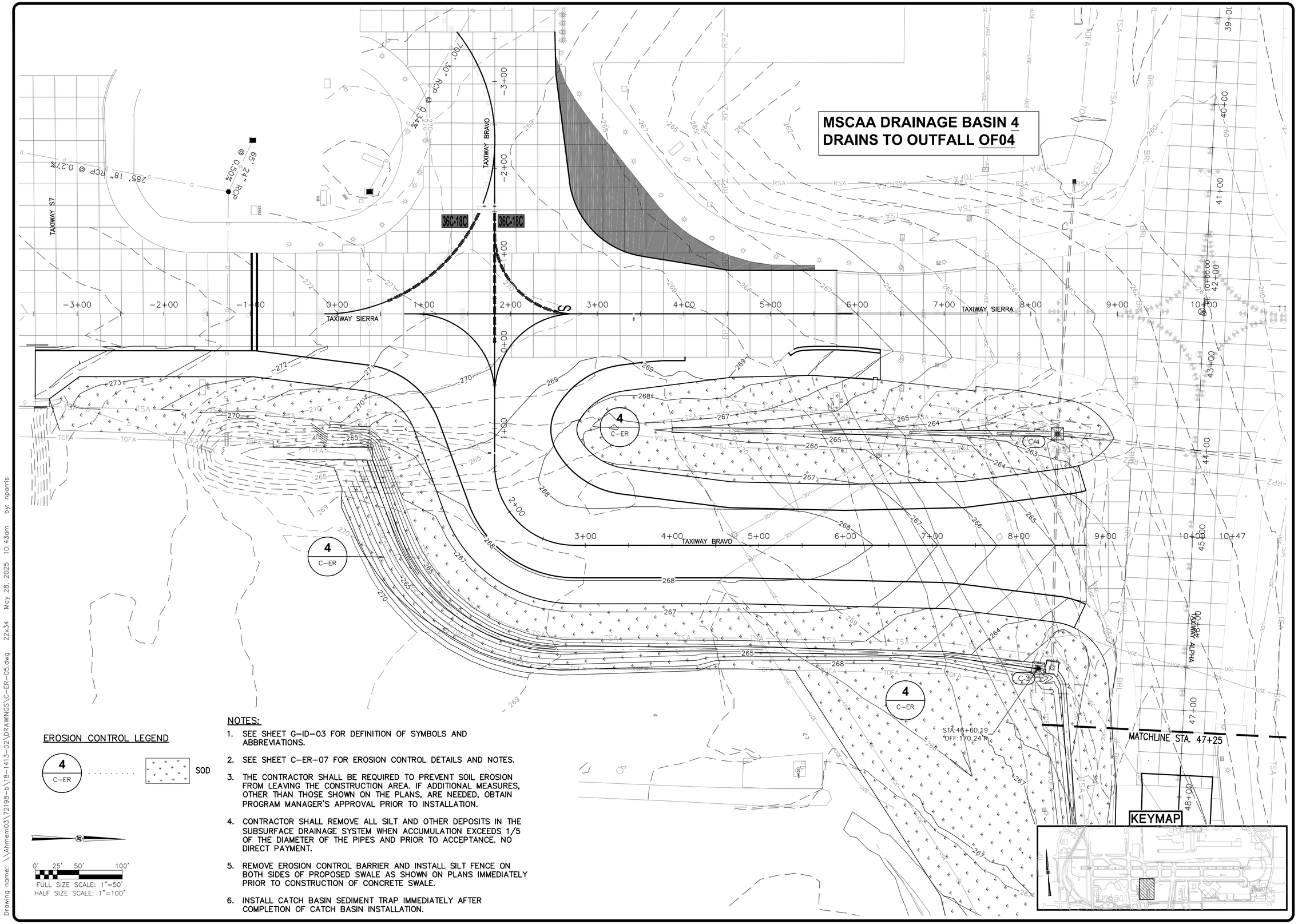

EROSION CONTROL LEGEND

4 / C-ER ..... SOD

0' 25' 50' 100'
FULL SIZE SCALE: 1"=50'
HALF SIZE SCALE: 1"=100'

NOTES:

1. SEE SHEET G-ID-03 FOR DEFINITION OF SYMBOLS AND ABBREVIATIONS.
2. SEE SHEET C-ER-07 FOR EROSION CONTROL DETAILS AND NOTES.
3. THE CONTRACTOR SHALL BE REQUIRED TO PREVENT SOIL EROSION FROM LEAVING THE CONSTRUCTION AREA. IF ADDITIONAL MEASURES, OTHER THAN THOSE SHOWN ON THE PLANS, ARE NEEDED, OBTAIN PROGRAM MANAGER'S APPROVAL PRIOR TO INSTALLATION.
4. CONTRACTOR SHALL REMOVE ALL SILT AND OTHER DEPOSITS IN THE SUBSURFACE DRAINAGE SYSTEM WHEN ACCUMULATION EXCEEDS 1/5 OF THE DIAMETER OF THE PIPES AND PRIOR TO ACCEPTANCE. NO DIRECT PAYMENT.
5. REMOVE EROSION CONTROL BARRIER AND INSTALL SILT FENCE ON BOTH SIDES OF PROPOSED SWALE AS SHOWN ON PLANS IMMEDIATELY PRIOR TO CONSTRUCTION OF CONCRETE SWALE.
6. INSTALL CATCH BASIN SEDIMENT TRAP IMMEDIATELY AFTER COMPLETION OF CATCH BASIN INSTALLATION.

MEMPHIS - SHELBY COUNTY AIRPORT AUTHORITY
MEMPHIS INTERNATIONAL AIRPORT
2491 WINCHESTER RD. SUITE 113
MEMPHIS, TENNESSEE
38116-3856

PROGRAM MANAGER
PARSONS
Program Management Consultant
Parsons Transportation Group Inc.
Project Office:
4225 Airways Blvd.
Memphis TN, 38116
JOB NO.

Allen&Hoshall
engineers-architects-surveyors
1661 INTERNATIONAL DRIVE
SUITE 100
MEMPHIS, TENNESSEE 38120
PHONE: 901-820-0820
FAX: 901-683-1001
JOB NO. 72198-B

ENGINEER-SUBCONSULTANT
POWERS HILL DESIGN
CIVIL ENGINEERING. CIVIL RESPONSIBILITY.
80 Monroe Avenue
Suite 420
Memphis, TN 38103
Tel: 901.543.8000
JOB NO.

DRAWN BY: GD
CHECKED BY: SH
APPROVED BY: SH

STEVEN HILL
REGISTERED ENGINEER
No. 115212
STATE OF TENNESSEE
03/17/25

ISSUED FOR BID

NO.	DESCRIPTION	DATE	BY

REVISIONS

PROJECT:
TAXIWAY BRAVO RECONFIGURATION (HOT SPOT 1)

SHEET TITLE:
EPSC PLAN-PHASE 3 TAXIWAY BRAVO STA. 0+17.89 TO STA. 9+24.90

MSCAA NO. 18-1413-02
DWG. FILE NAME C-ER-05.DWG
DATE 03/17/2025
DWG NO. C-ER-05
SCALE 1"=50'
FACILITY NO. NONE
SHEET NO. 20 of 73

Drawing name: \\Ahmem03\72198-b\18-1413-02\DRAWINGS\C-ER-05.dwg 22x34 May 28, 2025 10:43am by: nparris

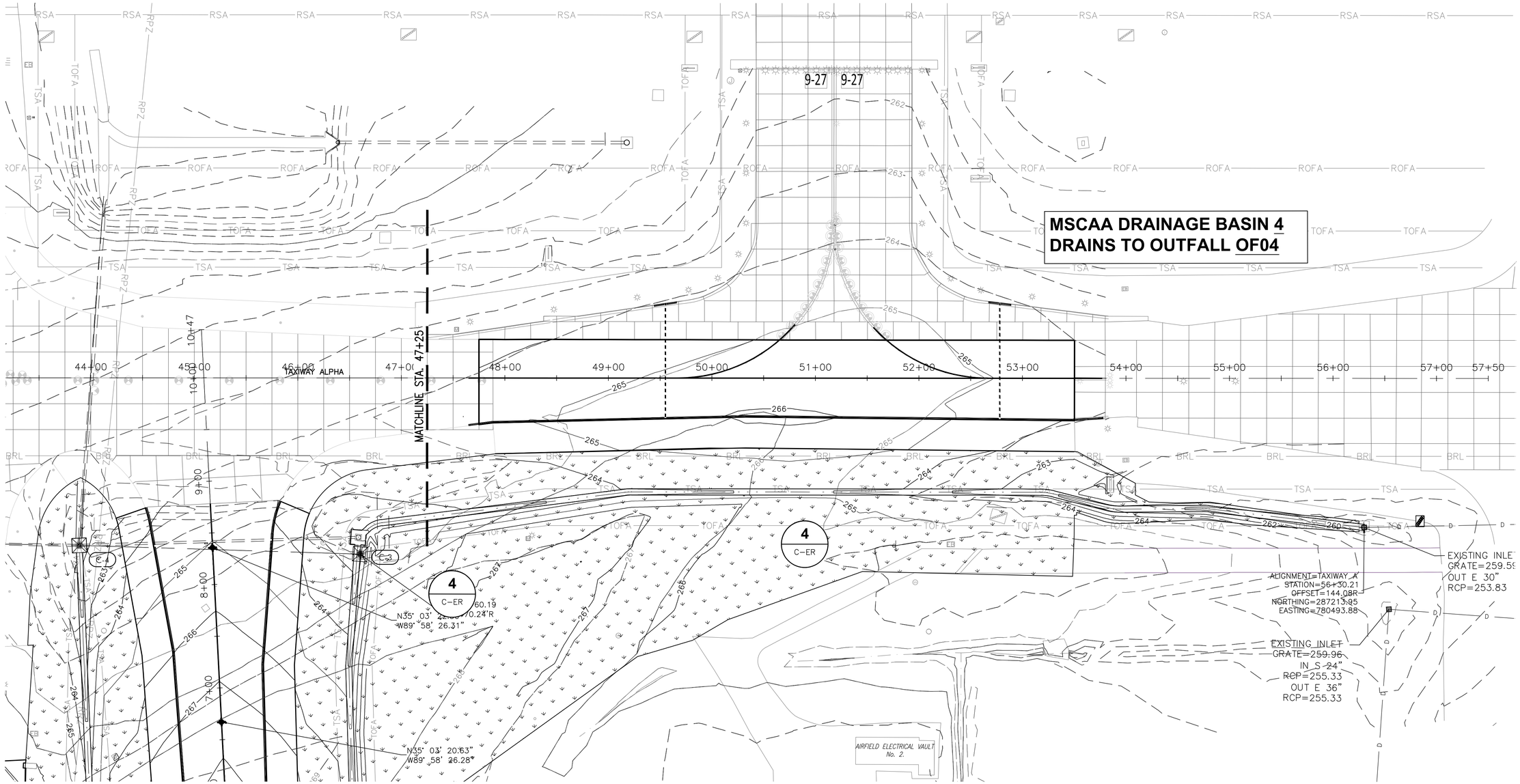

EROSION CONTROL LEGEND

4 / C-ER ..... SOD

NOTES:

1. SEE SHEET G-ID-03 FOR DEFINITION OF SYMBOLS AND ABBREVIATIONS.
2. SEE SHEET C-ER-07 FOR EROSION CONTROL DETAILS AND NOTES.
3. THE CONTRACTOR SHALL BE REQUIRED TO PREVENT SOIL EROSION FROM LEAVING THE CONSTRUCTION AREA. IF ADDITIONAL MEASURES, OTHER THAN THOSE SHOWN ON THE PLANS, ARE NEEDED, OBTAIN PROGRAM MANAGER'S APPROVAL PRIOR TO INSTALLATION.
4. CONTRACTOR SHALL REMOVE ALL SILT AND OTHER DEPOSITS IN THE SUBSURFACE DRAINAGE SYSTEM WHEN ACCUMULATION EXCEEDS 1/5 OF THE DIAMETER OF THE PIPES AND PRIOR TO ACCEPTANCE. NO DIRECT PAYMENT.
5. REMOVE EROSION CONTROL BARRIER AND INSTALL SILT FENCE ON BOTH SIDES OF PROPOSED SWALE AS SHOWN ON PLANS IMMEDIATELY PRIOR TO CONSTRUCTION OF CONCRETE SWALE.
6. INSTALL CATCH BASIN SEDIMENT TRAP IMMEDIATELY AFTER COMPLETION OF CATCH BASIN INSTALLATION.

0' 25' 50' 100'
FULL SIZE SCALE: 1"=50'
HALF SIZE SCALE: 1"=100'

KEYMAP

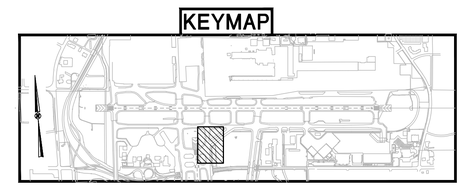

MEMPHIS - SHELBY COUNTY AIRPORT AUTHORITY
MEMPHIS INTERNATIONAL AIRPORT
2491 WINCHESTER RD. SUITE 113
MEMPHIS, TENNESSEE
38116-3856

PROGRAM MANAGER
PARSONS
Program Management Consultant
Parsons Transportation Group Inc.
Project Office:
4225 Airways Blvd.
Memphis TN, 38116
JOB NO.

Allen&Hoshall
engineers-architects-surveyors
1661 INTERNATIONAL DRIVE
SUITE 100
MEMPHIS, TENNESSEE 38120
PHONE: 901-820-0820
FAX: 901-683-1001
JOB NO. 72198-B

ENGINEER-SUBCONSULTANT
POWERS HILL DESIGN
CIVIL ENGINEERING. CIVIL RESPONSIBILITY.
80 Monroe Avenue
Suite 420
Memphis, TN 38103
Tel: 901.543.8000
JOB NO.

DRAWN BY: GD
CHECKED BY: SH
APPROVED BY: SH

STEVEN HILL
REGISTERED ENGINEER
AGENT
No. 115212
STATE OF TENNESSEE
03/17/25

ISSUED FOR BID

NO.	DESCRIPTION	DATE	BY

REVISIONS

PROJECT:
TAXIWAY BRAVO RECONFIGURATION (HOT SPOT 1)

SHEET TITLE:
EPSC PLAN-PHASE 3 TAXIWAY ALPHA STA. 47+25.00 TO STA. 53+50.00

MSCAA NO. 18-1413-02
DWG. FILE NAME C-ER-06.DWG
DATE 03/17/2025
DWG NO. C-ER-06
SCALE 1"=50'
SHEET NO. 21 of 73
FACILITY NO. NONE

TDEC NOTE

THE CONTRACTOR MUST CERTIFY ON A WEEKLY BASIS, THE FORM PROVIDED IN PART 4 OF THE CONTRACTOR SWPPP, THAT THE WEEKLY INSPECTION OF EROSION AND SEDIMENT CONTROLS AND OF OUTFALL POINTS WAS PERFORMED; AND WHETHER OR NOT ALL PLANNED AND DESIGNED EROSION AND SEDIMENT CONTROLS ARE INSTALLED AND IN WORKING ORDER. THE CERTIFICATION MUST BE EXECUTED BY A PERSON WHO MEETS THE SIGNATORY REQUIREMENTS DESCRIBED IN SECTION 12.1 OF THE CONTRACTOR SWPPP.

THE RECORD OF CERTIFICATIONS ON THE "TENNESSEE CONSTRUCTION STORM WATER INSPECTION REPORT" FORM MUST BE SUBMITTED BY THE 15TH OF THE MONTH FOLLOWING THE END OF THE QUARTER TO:

TENNESSEE DEPARTMENT OF ENVIRONMENT AND CONSERVATION DIVISION OF WATER POLLUTION CONTROL
8383 WOLF LAKE DR. BARTLETT, TN. 38133–4119

QUARTERS ARE JANUARY–MARCH, APRIL–JUNE, JULY–SEPTEMBER AND OCTOBER–DECEMBER.

THE STATE OF TENNESSEE DEPARTMENT OF ENVIRONMENT AND CONSERVATION, DIVISION OF WATER POLLUTION CONTROL (TDEC–DWPC) HAS AUTHORIZED THE DISCHARGES OF STORM WATER FROM ALL CONSTRUCTION SITES AT THE MEMPHIS INTERNATIONAL AIRPORT (MEM) UNDER THE TENNESSEE GENERAL PERMIT NO. TNR10–0000 AND THE MEM OF THE MONTH (POSTMARKED) PERMIT NO. TNR15–0091 (TNR 10–0000 AND TNR15–0091) PROVIDED THAT THE PERMIT PROVISIONS ARE ADHERED TO AND THE STATE OF TENNESSEE (THE STATE) RECEIVES FORMAL APPLICATION FROM THE PARTIES RESPONSIBLE FOR THE CONSTRUCTION. UNDER TNR 10–0000 AND TNR15–0091, BOTH THE MEMPHIS–SHELBY COUNTY AIRPORT AUTHORITY (MSCAA) AND THE CONTRACTORS PERFORMING THE CONSTRUCTION ACTIVITIES ARE RESPONSIBLE TO COMPLY WITH THE PERMIT. MSCAA HAS DEVELOPED THIS "CONTRACTOR GUIDELINES" (CONTRACTOR SWPPP) TO ASSIST CONTRACTORS COMPLIANCE WITH THE PROVISIONS OF TNR 10–0000 AND TNR15–0091 AND TO COORDINATE THE COMPLIANCE RESPONSIBILITIES OF THE CONTRACTORS AND SUB–CONTRACTORS ENGAGED IN CONSTRUCTION ACTIVITIES ON PROPERTIES OWNED OR MANAGED BY MSCAA. A COPY OF THE CONTRACTOR STORM WATER POLLUTION PREVENTION PLAN AND CONTRACTOR GUIDELINES IS AVAILABLE FROM ALLEN AND HOSHALL OR THE MSCAA.

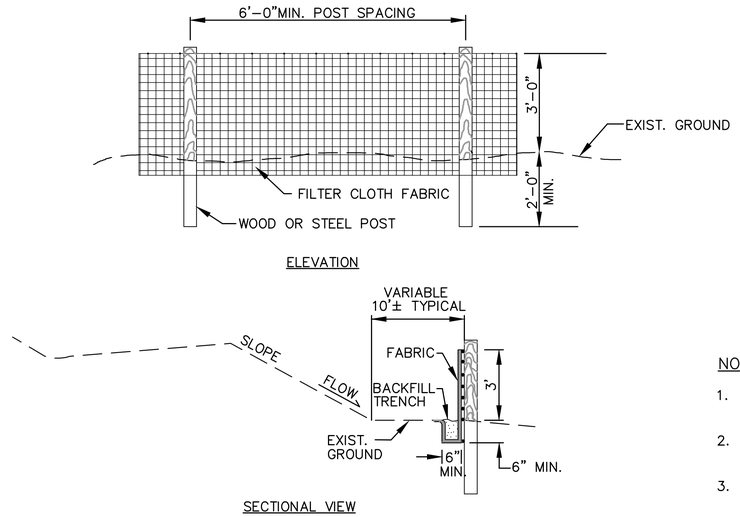

1 TEMPORARY SILT FENCE

C–ER–07 PAY ITEM C–102–5.1 N.T.S.

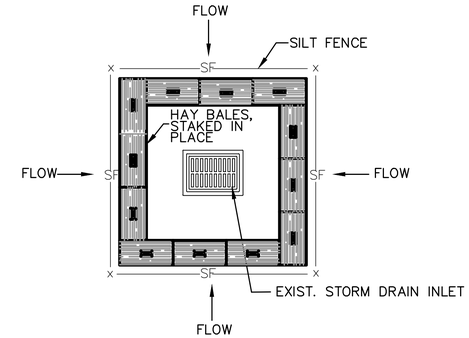

2 CATCH BASIN SEDIMENT TRAP

C–ER–07 PAY ITEM P–102–5.2 N.T.S.

NOTES

1. CONTRACTOR SHALL CLEAN ALL STORM DRAINAGE PIPES PERIODICALLY AND AT END OF THE PROJECT.
2. CONTRACTOR SHALL MAINTAIN ALL EROSION CONTROL DEVICES UNTIL CONSTRUCTION IS COMPLETE.
3. PROTECT ALL EXISTING INLETS PRIOR TO TOPSOIL STRIPPING AND EXCAVATION. INSTALL OTHER EROSION CONTROL DEVICES AS SOON AS PRACTICAL.
4. ALL TEMPORARY EROSION CONTROL ITEMS TO BE REMOVED BY THE CONTRACTOR ONCE PERMANENT TURF IS ESTABLISHED.
5. COST OF REMOVAL IS INCIDENTAL TO THE PAY ITEMS FOR INSTALLATION.
6. PROTECT INLETS DURING ALL STAGES OF CONSTRUCTION.
7. PLACE WOOD WEIRS IN PIPE INLETS PRIOR TO CONSTRUCTION OF INLET STRUCTURE. LEAVE 1/3 DIAMETER OF PIPE OPEN ABOVE THE WEIR. REMOVE WEIR DURING CONSTRUCTION OF STRUCTURE. THERE IS NO DIRECT PAY FOR WOODEN WEIRS.
8. CONTRACTOR SHALL MAINTAIN FACILITIES INSTALLED BY PREVIOUS CONTRACTOR(S) UNTIL PERMANENT TURF IS INSTALLED.

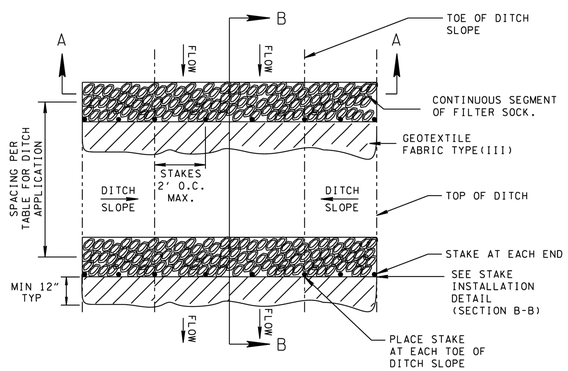

PLAN VIEW FOR DITCH APPLICATION

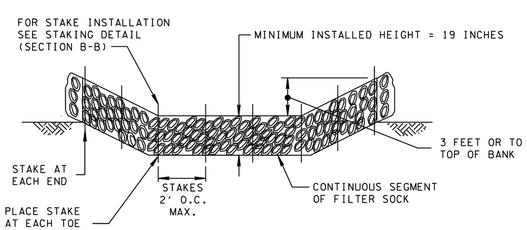

SECTION A–A

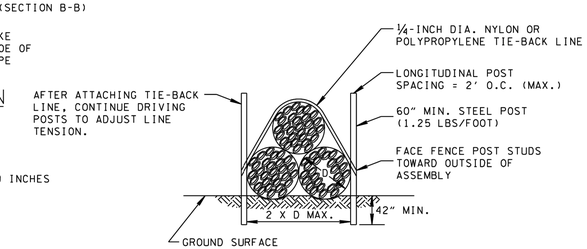

FILTER SOCK STACKING DETAIL
SEE NOTE D

3 FILTER SOCK CHECK DAM

C–ER–07 PAY ITEM C–102–5.3 N.T.S.

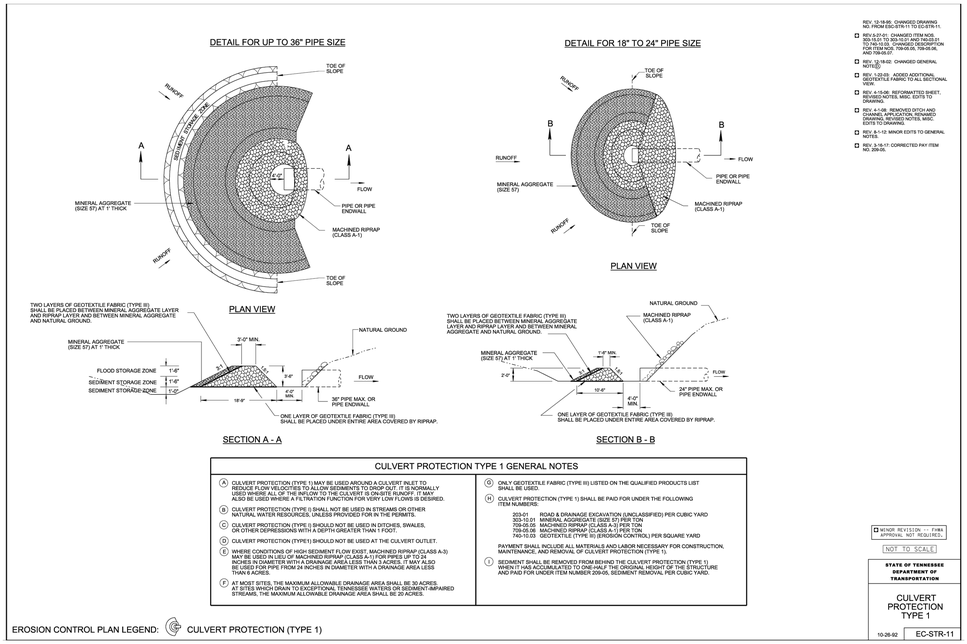

4 CULVERT PROTECTION TYPE 1 - EC-STR-11

C–ER–07 PAY ITEM C–102–5.4 N.T.S.

MEMPHIS - SHELBY COUNTY AIRPORT AUTHORITY
MEMPHIS INTERNATIONAL AIRPORT
2491 WINCHESTER RD. SUITE 113
MEMPHIS, TENNESSEE
38116–3856

PROGRAM MANAGER
PARSONS
Program Management Consultant
Parsons Transportation Group Inc.
Project Office:
4225 Airways Blvd.
Memphis TN, 38116
JOB NO.

Allen&Hoshall
engineers-architects-surveyors
1661 INTERNATIONAL DRIVE
SUITE 100
MEMPHIS, TENNESSEE 38120
PHONE: 901–820–0820
FAX: 901–683–1001
JOB NO. 72198-B

ENGINEER–SUBCONSULTANT
POWERS HILL DESIGN
CIVIL ENGINEERING. CIVIL RESPONSIBILITY.
80 Monroe Avenue
Suite 420
Memphis, TN 38103
Tel: 901.543.8000
JOB NO.

DRAWN BY: GD
CHECKED BY: SH
APPROVED BY: SH

STEVEN HILL REGISTERED ENGINEER AGENT No. 16212 STATE OF TENNESSEE 03/17/25

ISSUED FOR BID

NO.	DESCRIPTION	DATE	BY

REVISIONS

PROJECT:
TAXIWAY BRAVO RECONFIGURATION (HOT SPOT 1)

SHEET TITLE:
EROSION CONTROL DETAILS

MSCAA NO. 18-1413-02
DWG. FILE NAME C-ER-07.DWG
DATE 03/17/2025
DWG NO. C-ER-07
SCALE 1"=50'
SHEET NO. 22 of 73
FACILITY NO. NONE

Drawing name: \\Ahmem03\72198-b\18-1413-02\DRAWINGS\C-ER-07.dwg 22x34 May 28, 2025 10:44am by: nparris

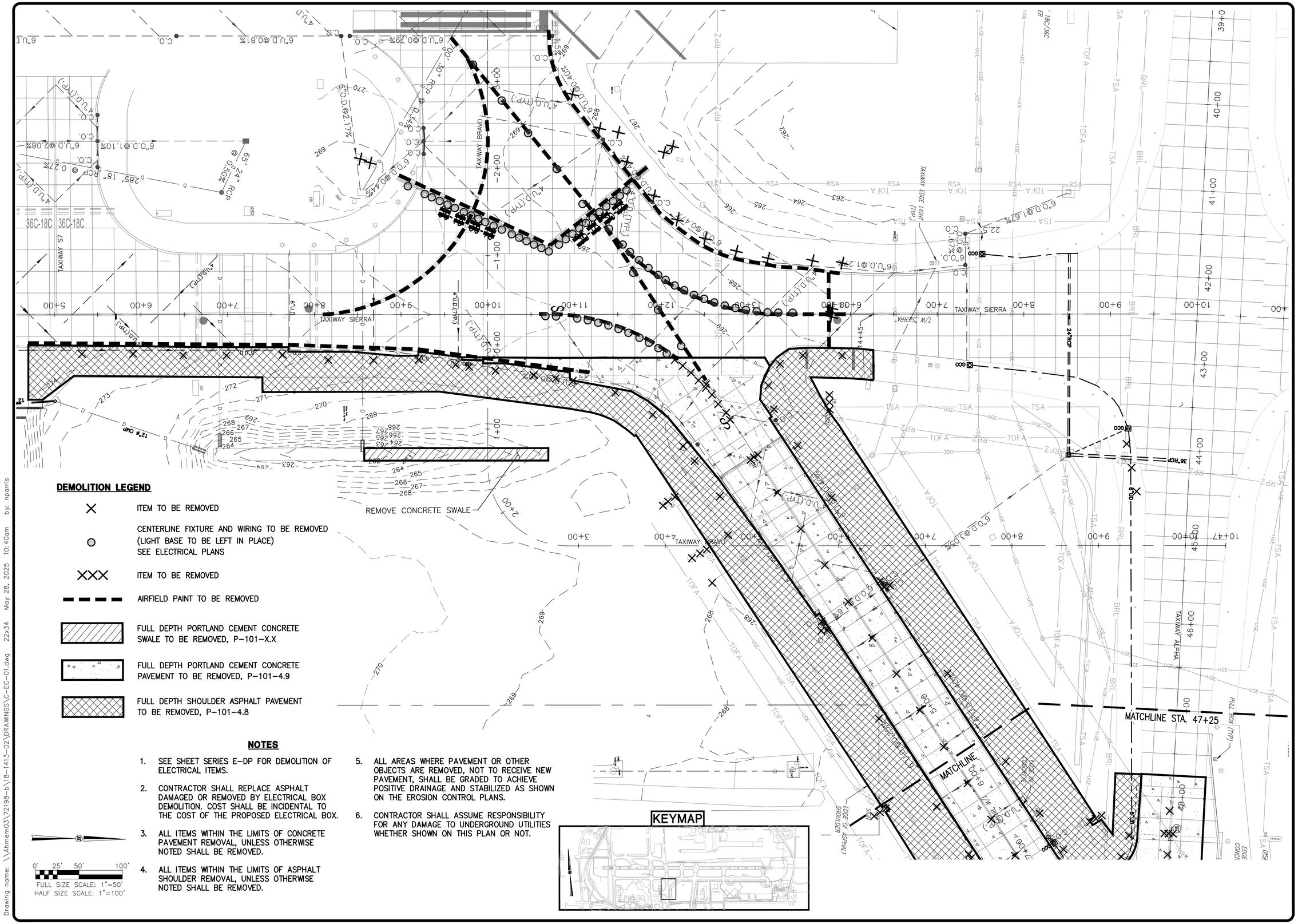

DEMOLITION LEGEND

- ITEM TO BE REMOVED
- CENTERLINE FIXTURE AND WIRING TO BE REMOVED (LIGHT BASE TO BE LEFT IN PLACE) SEE ELECTRICAL PLANS
- ITEM TO BE REMOVED
- AIRFIELD PAINT TO BE REMOVED
- FULL DEPTH PORTLAND CEMENT CONCRETE SWALE TO BE REMOVED, P-101-X.X
- FULL DEPTH PORTLAND CEMENT CONCRETE PAVEMENT TO BE REMOVED, P-101-4.9
- FULL DEPTH SHOULDER ASPHALT PAVEMENT TO BE REMOVED, P-101-4.8

NOTES

1. SEE SHEET SERIES E-DP FOR DEMOLITION OF ELECTRICAL ITEMS.
2. CONTRACTOR SHALL REPLACE ASPHALT DAMAGED OR REMOVED BY ELECTRICAL BOX DEMOLITION. COST SHALL BE INCIDENTAL TO THE COST OF THE PROPOSED ELECTRICAL BOX.
3. ALL ITEMS WITHIN THE LIMITS OF CONCRETE PAVEMENT REMOVAL, UNLESS OTHERWISE NOTED SHALL BE REMOVED.
4. ALL ITEMS WITHIN THE LIMITS OF ASPHALT SHOULDER REMOVAL, UNLESS OTHERWISE NOTED SHALL BE REMOVED.
5. ALL AREAS WHERE PAVEMENT OR OTHER OBJECTS ARE REMOVED, NOT TO RECEIVE NEW PAVEMENT, SHALL BE GRADED TO ACHIEVE POSITIVE DRAINAGE AND STABILIZED AS SHOWN ON THE EROSION CONTROL PLANS.
6. CONTRACTOR SHALL ASSUME RESPONSIBILITY FOR ANY DAMAGE TO UNDERGROUND UTILITIES WHETHER SHOWN ON THIS PLAN OR NOT.

0' 25' 50' 100'
FULL SIZE SCALE: 1"=50'
HALF SIZE SCALE: 1"=100'

Drawing name: \\Ahmem03\72198-b\18-1413-02\DRAWINGS\C-EC-01.dwg 22x34 May 28, 2025 10:40am by: nparris

MEMPHIS - SHELBY COUNTY AIRPORT AUTHORITY

MEMPHIS INTERNATIONAL AIRPORT
2491 WINCHESTER RD. SUITE 113
MEMPHIS, TENNESSEE
38116-3856

PROGRAM MANAGER
PARSONS
Program Management Consultant
Parsons Transportation Group Inc.
Project Office:
4225 Airways Blvd.
Memphis TN, 38116
JOB NO.

Allen&Hoshall
engineers-architects-surveyors
1661 INTERNATIONAL DRIVE
SUITE 100
MEMPHIS, TENNESSEE 38120
PHONE: 901-820-0820
FAX: 901-683-1001
JOB NO. 72198-B

ENGINEER-SUBCONSULTANT
POWERS HILL DESIGN
CIVIL ENGINEERING. CIVIL RESPONSIBILITY.
80 Monroe Avenue
Suite 420
Memphis, TN 38103
Tel: 901.543.8000
JOB NO.

DRAWN BY: GD
CHECKED BY: SH
APPROVED BY: SH

WILLIAM T. GIBSON REGISTERED ENGINEER AGRICULTURE No. 104251 STATE OF TENNESSEE 3/17/25

ISSUED FOR BID

NO.	DESCRIPTION	DATE	BY

REVISIONS

PROJECT:
TAXIWAY BRAVO RECONFIGURATION (HOT SPOT 1)

SHEET TITLE:
EXISTING CONDITIONS AND DEMOLITION PLAN TAXIWAY BRAVO STA. 0+17.89 TO STA. 9+24.90

MSCAA NO. 18-1413-02
DWG. FILE NAME: C-EC-01.DWG
DATE: 03/17/2025
DWG NO. C-EC-01
SCALE: 1"=50'
FACILITY NO. NONE
SHEET NO. 23 of 73

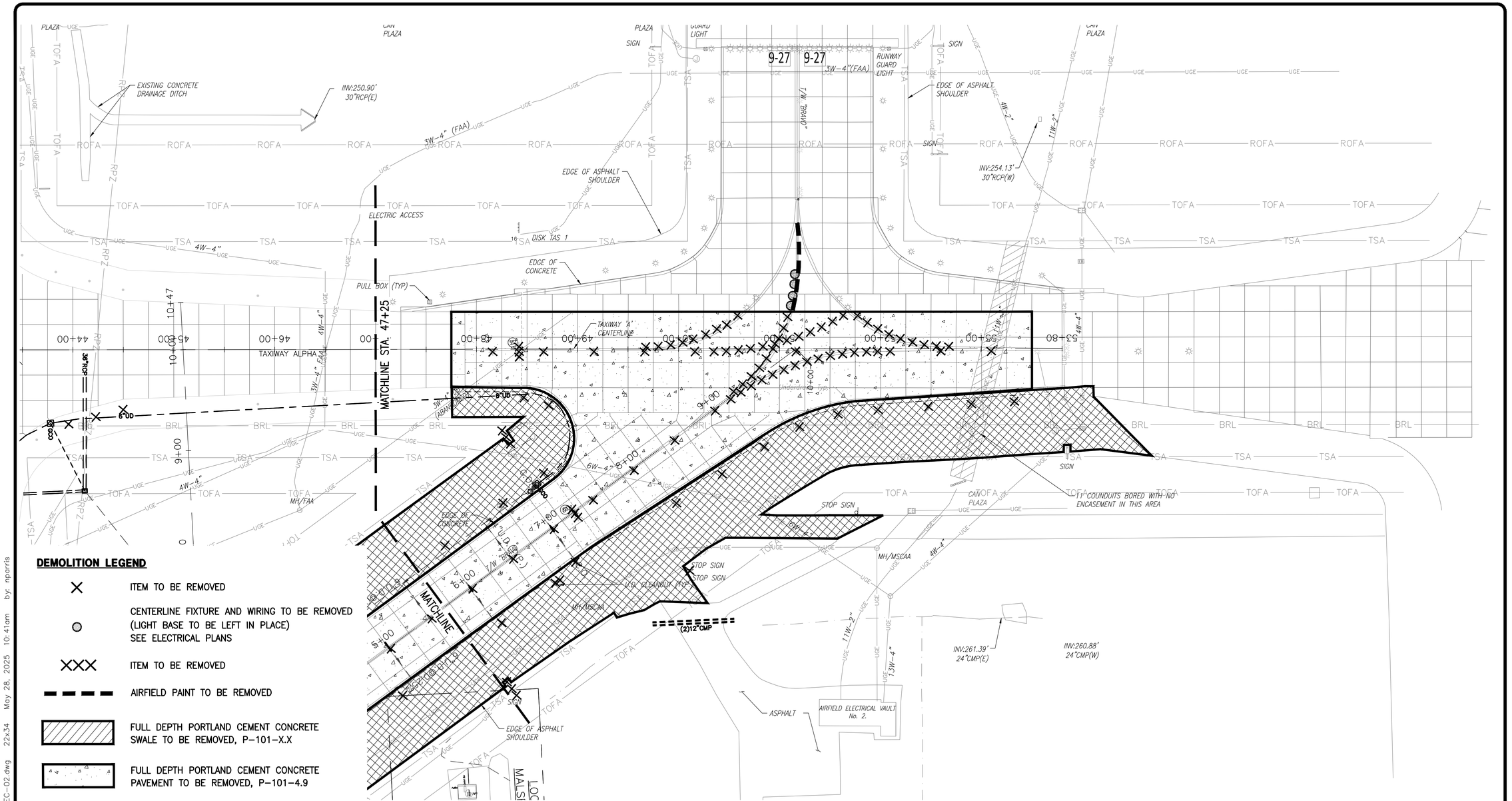

DEMOLITION LEGEND

- ✕ ITEM TO BE REMOVED
- ○ CENTERLINE FIXTURE AND WIRING TO BE REMOVED (LIGHT BASE TO BE LEFT IN PLACE) SEE ELECTRICAL PLANS
- XXX ITEM TO BE REMOVED
- AIRFIELD PAINT TO BE REMOVED
- FULL DEPTH PORTLAND CEMENT CONCRETE SWALE TO BE REMOVED, P-101-X.X
- FULL DEPTH PORTLAND CEMENT CONCRETE PAVEMENT TO BE REMOVED, P-101-4.9
- FULL DEPTH SHOULDER ASPHALT PAVEMENT TO BE REMOVED, P-101-4.8

NOTES

1. SEE SHEET SERIES E-DP FOR DEMOLITION OF ELECTRICAL ITEMS.
2. CONTRACTOR SHALL REPLACE ASPHALT DAMAGED OR REMOVED BY ELECTRICAL BOX DEMOLITION. COST SHALL BE INCIDENTAL TO THE COST OF THE PROPOSED ELECTRICAL BOX.
3. ALL ITEMS WITHIN THE LIMITS OF CONCRETE PAVEMENT REMOVAL, UNLESS OTHERWISE NOTED SHALL BE REMOVED.
4. ALL ITEMS WITHIN THE LIMITS OF ASPHALT SHOULDER REMOVAL, UNLESS OTHERWISE NOTED SHALL BE REMOVED.
5. ALL AREAS WHERE PAVEMENT OR OTHER OBJECTS ARE REMOVED, NOT TO RECEIVE NEW PAVEMENT, SHALL BE GRADED TO ACHIEVE POSITIVE DRAINAGE AND STABILIZED AS SHOWN ON THE EROSION CONTROL PLANS.
6. CONTRACTOR SHALL ASSUME RESPONSIBILITY FOR ANY DAMAGE TO UNDERGROUND UTILITIES WHETHER SHOWN ON THIS PLAN OR NOT.

0' 25' 50' 100'
FULL SIZE SCALE: 1"=50'
HALF SIZE SCALE: 1"=100'

KEYMAP

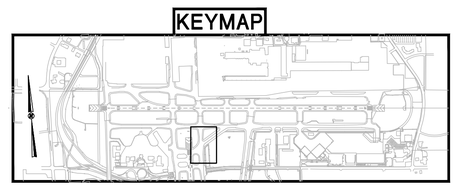

Drawing name: \\Ahmem03\72198-b\18-1413-02\DRAWINGS\C-EC-02.dwg 22x34 May 28, 2025 10:41am by: nparris

MEMPHIS - SHELBY COUNTY AIRPORT AUTHORITY
MEMPHIS INTERNATIONAL AIRPORT
2491 WINCHESTER RD. SUITE 113
MEMPHIS, TENNESSEE
38116-3856

PROGRAM MANAGER
PARSONS
Program Management Consultant
Parsons Transportation Group Inc.
Project Office:
4225 Airways Blvd.
Memphis TN, 38116
JOB NO.

Allen&Hoshall
engineers-architects-surveyors
1661 INTERNATIONAL DRIVE
SUITE 100
MEMPHIS, TENNESSEE 38120
PHONE: 901-820-0820
FAX: 901-683-1001
JOB NO. 72198-B

ENGINEER-SUBCONSULTANT
POWERS HILL DESIGN
CIVIL ENGINEERING. CIVIL RESPONSIBILITY.
80 Monroe Avenue
Suite 420
Memphis, TN 38103
Tel: 901.543.8000
JOB NO.

DRAWN BY: GD
CHECKED BY: SH
APPROVED BY: SH

WILLIAM T. GIBSON REGISTERED ENGINEER AGRICULTURE No. 104251 STATE OF TENNESSEE 3/13/25

ISSUED FOR BID

NO.	DESCRIPTION	DATE	BY

REVISIONS

PROJECT:
TAXIWAY BRAVO RECONFIGURATION (HOT SPOT 1)

SHEET TITLE:
EXISTING CONDITIONS AND DEMOLITION PLAN TAXIWAY ALPHA STA. 47+25.00 TO STA. 53+50.00

MSCAA NO. 18-1413-02
DWG. FILE NAME C-EC-02.DWG
DATE 03/17/2025
DWG NO. C-EC-02
SCALE 1"=50'
FACILITY NO. NONE
SHEET NO. 24 of 73

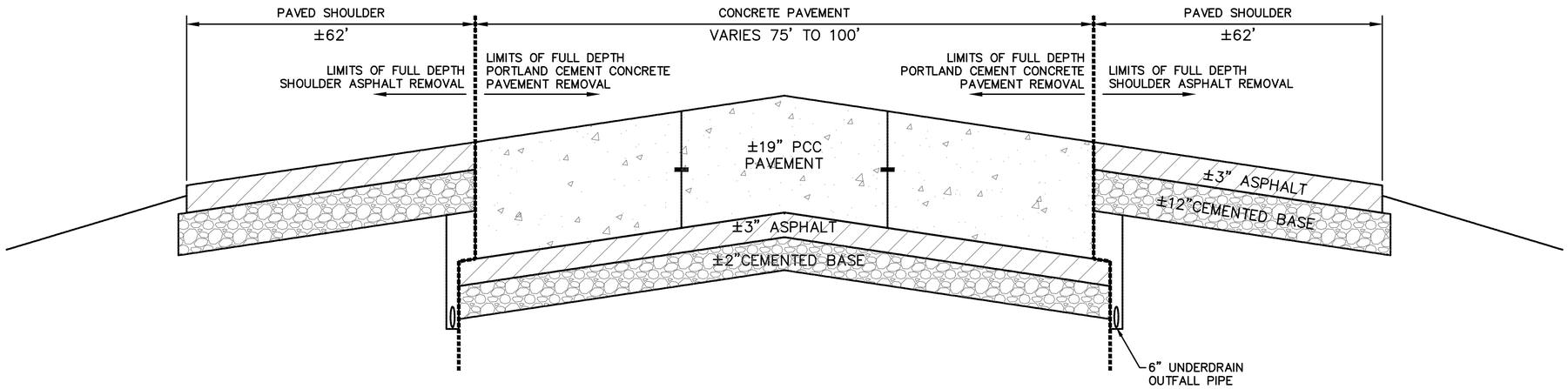

EXISTING PAVEMENT SECTION T/W B

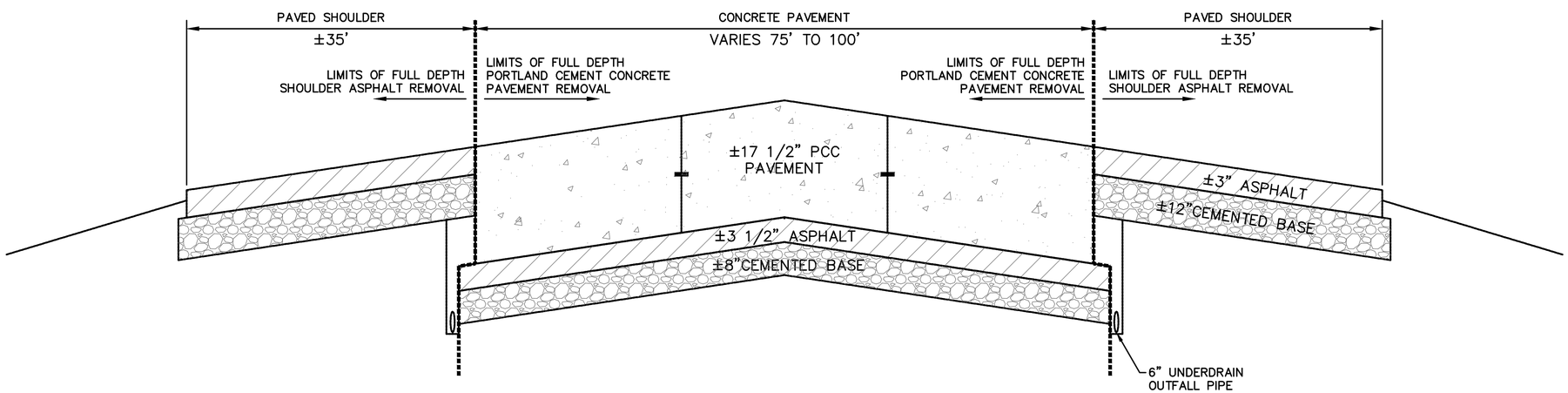

EXISTING PAVEMENT SECTION T/W A

MEMPHIS - SHELBY COUNTY AIRPORT AUTHORITY

MEMPHIS INTERNATIONAL AIRPORT
2491 WINCHESTER RD. SUITE 113
MEMPHIS, TENNESSEE
38116-3856

PROGRAM MANAGER
PARSONS
Program Management Consultant
Parsons Transportation Group Inc.
Project Office:
4225 Airways Blvd.
Memphis TN, 38116
JOB NO.

Allen&Hoshall
engineers-architects-surveyors
1661 INTERNATIONAL DRIVE
SUITE 100
MEMPHIS, TENNESSEE 38120
PHONE: 901-820-0820
FAX: 901-683-1001
JOB NO. 72198-B

ENGINEER-SUBCONSULTANT
POWERS HILL DESIGN
CIVIL ENGINEERING. CIVIL RESPONSIBILITY.
80 Monroe Avenue
Suite 420
Memphis, TN 38103
Tel: 901.543.8000
JOB NO.

DRAWN BY: RNP
CHECKED BY: HP
APPROVED BY: TG

WILLIAM T. GIBSON
REGISTERED ENGINEER
AGRICULTURE
No. 104251
STATE OF TENNESSEE
3/13/25

ISSUED FOR BID

NO.	DESCRIPTION	DATE	BY

REVISIONS

PROJECT:
TAXIWAY BRAVO RECONFIGURATION (HOT SPOT 1)

SHEET TITLE:
EXISTING SECTION TAXIWAY BRAVO & TAXIWAY ALPHA

MSCAA NO. 18-1413-02
DWG. FILE NAME C-TS-01.DWG
DATE 03/17/2025
DWG NO. C-TS-01
SCALE
FACILITY NO. NONE
SHEET NO. 25 of 73

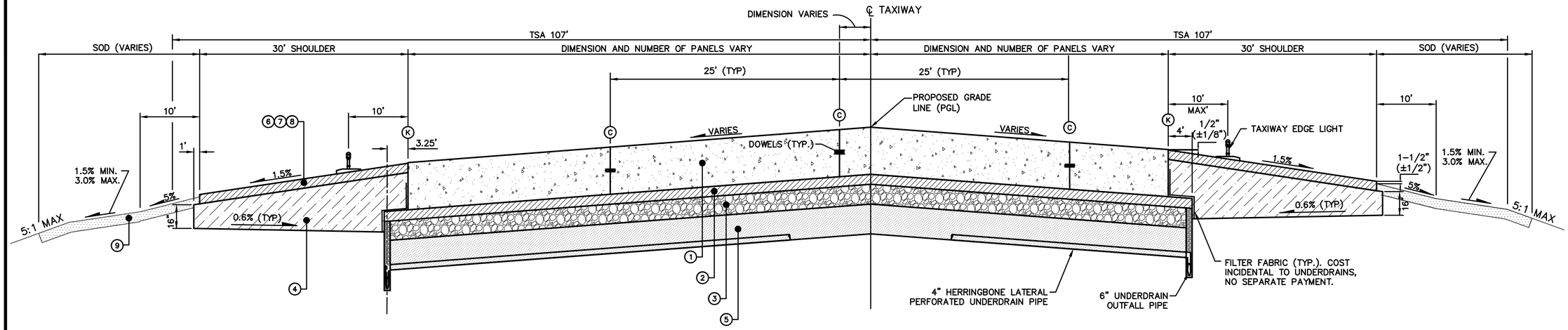

TYPICAL PAVEMENT SECTIONS T/W B

STA. 0+17.89 TO STA. 2+87.33

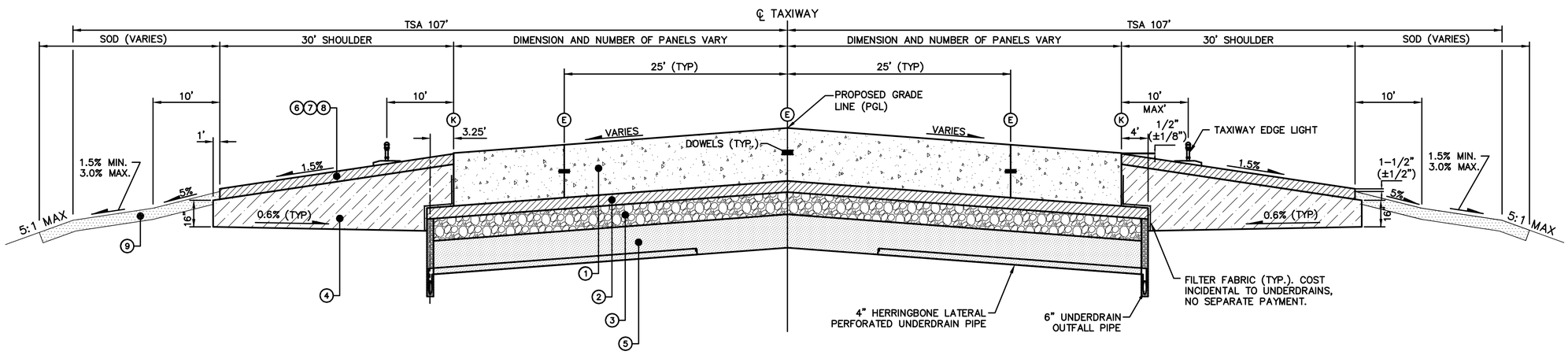

TYPICAL PAVEMENT SECTIONS T/W B

STA. 2+87.33 TO STA. 8+78.56

	DESCRIPTION
1	P-501 – 19" THICK CEMENT CONCRETE PAVEMENT
2	P-307 – 6" THICK CEMENT TREATED PERMEABLE BASE COURSE
3	P-304 – 8" THICK CEMENT TREATED AGGREGATE BASE COURSE WITH BITUMINOUS CURING SEAL – PLACE IN ONE LIFT
4	P-219 – VARIABLE THICKNESS (16" MIN.) AGGREGATE BASE COURSE
5	P-220 – 12" THICK CEMENT TREATED SUBGRADE PLACED IN TWO (2) 6" LIFTS
6	P-403 – 2 ½" THICK BITUMINOUS SURFACE COURSE, 2 ½" THICK BITUMINOUS BASE COURSE
7	P-603 – BITUMINOUS TACK COAT, ESTIMATED AT 0.02-0.05 GAL/SY
8	P-602 – BITUMINOUS PRIME COAT, ESTIMATED AT 0.15-0.30 GAL/SY
9	T-904 – TURF TREATMENT CONSISTING OF ON-SITE TOP SOILING (4") T-905 – SODDING

MEMPHIS - SHELBY COUNTY AIRPORT AUTHORITY

MEMPHIS INTERNATIONAL AIRPORT
2491 WINCHESTER RD. SUITE 113
MEMPHIS, TENNESSEE
38116-3856

PROGRAM MANAGER
PARSONS
Program Management Consultant
Parsons Transportation Group Inc.
Project Office:
4225 Airways Blvd.
Memphis TN, 38116
JOB NO.

Allen&Hoshall
engineers-architects-surveyors
1661 INTERNATIONAL DRIVE
SUITE 100
MEMPHIS, TENNESSEE 38120
PHONE: 901-820-0820
FAX: 901-683-1001
JOB NO. 72198-B

ENGINEER-SUBCONSULTANT
POWERS HILL DESIGN
CIVIL ENGINEERING. CIVIL RESPONSIBILITY.
80 Monroe Avenue
Suite 420
Memphis, TN 38103
Tel: 901.543.8000
JOB NO.

DRAWN BY: RNP
CHECKED BY: HP
APPROVED BY: TG

WILLIAM T. GIBSON REGISTERED ENGINEER AGRICULTURE No. 104251 STATE OF TENNESSEE
3/13/25

ISSUED FOR BID

NO.	DESCRIPTION	DATE	BY

REVISIONS

PROJECT:
TAXIWAY BRAVO RECONFIGURATION (HOT SPOT 1)

SHEET TITLE:
TYPICAL SECTIONS
TAXIWAY BRAVO

MSCAA NO. 18-1413-02
DWG. FILE NAME C-TS-02.DWG
DATE 03/17/2025
DWG NO. C-TS-02
SCALE
SHEET NO. 26 of 73
FACILITY NO. NONE

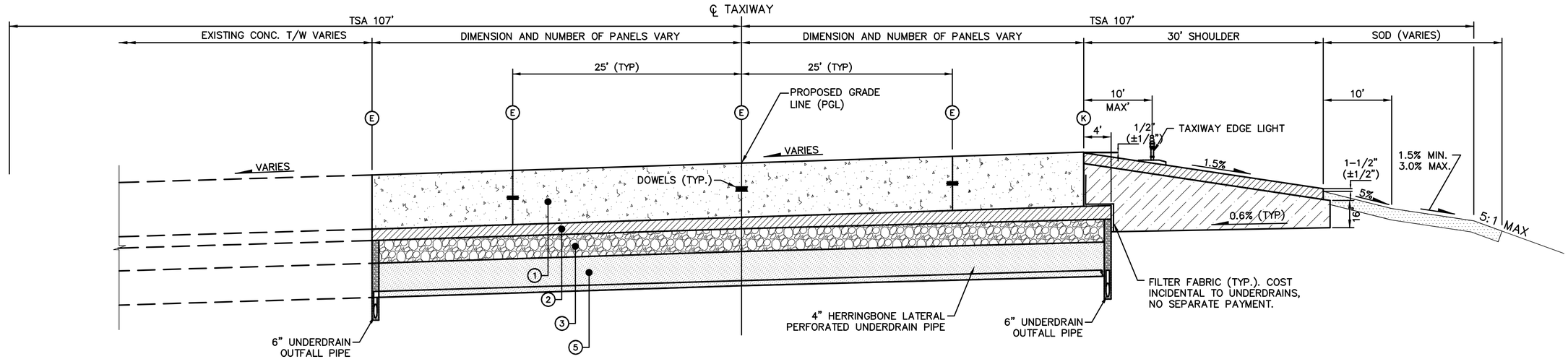

TYPICAL PAVEMENT SECTIONS T/W A

STA. 51+50± TO STA. 53+50

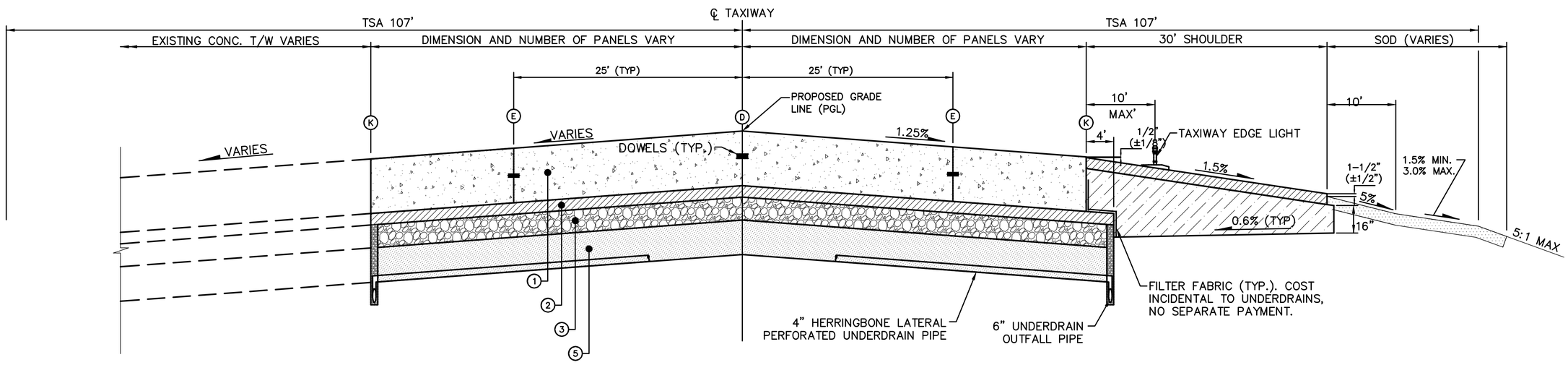

TYPICAL PAVEMENT SECTIONS T/W A

STA. 47+75 TO STA. 51+50 ±

	DESCRIPTION
1	P–501 – 19" THICK CEMENT CONCRETE PAVEMENT
2	P–307 – 6" THICK CEMENT TREATED PERMEABLE BASE COURSE
3	P–304 – 8" THICK CEMENT TREATED AGGREGATE BASE COURSE WITH BITUMINOUS CURING SEAL – PLACE IN ONE LIFT
4	P–219 – VARIABLE THICKNESS (16" MIN.) AGGREGATE BASE COURSE
5	P–220 – 12" THICK CEMENT TREATED SUBGRADE PLACED IN TWO (2) 6" LIFTS
6	P–403 – 2 ½" THICK BITUMINOUS SURFACE COURSE, 2 ½" THICK BITUMINOUS BASE COURSE
7	P–603 – BITUMINOUS TACK COAT, ESTIMATED AT 0.02–0.05 GAL/SY
8	P–602 – BITUMINOUS PRIME COAT, ESTIMATED AT 0.15–0.30 GAL/SY
9	T–904 – TURF TREATMENT CONSISTING OF ON–SITE TOP SOILING (4") T–905 – SODDING

MEMPHIS - SHELBY COUNTY AIRPORT AUTHORITY
MEMPHIS INTERNATIONAL AIRPORT
2491 WINCHESTER RD. SUITE 113
MEMPHIS, TENNESSEE
38116–3856

PROGRAM MANAGER
PARSONS
Program Management Consultant
Parsons Transportation Group Inc.
Project Office:
4225 Airways Blvd.
Memphis TN, 38116
JOB NO.

Allen&Hoshall
engineers-architects-surveyors
1661 INTERNATIONAL DRIVE
SUITE 100
MEMPHIS, TENNESSEE 38120
PHONE: 901–820–0820
FAX: 901–683–1001
JOB NO. 72198-B

ENGINEER–SUBCONSULTANT
POWERS HILL DESIGN
CIVIL ENGINEERING. CIVIL RESPONSIBILITY.
80 Monroe Avenue
Suite 420
Memphis, TN 38103
Tel: 901.543.8000
JOB NO.

DRAWN BY: RNP
CHECKED BY: HP
APPROVED BY: TG

WILLIAM T. GIBSON REGISTERED ENGINEER AGRICULTURE No. 104251 STATE OF TENNESSEE 3/17/25

ISSUED FOR BID

NO.	DESCRIPTION	DATE	BY

REVISIONS

PROJECT:
TAXIWAY BRAVO RECONFIGURATION (HOT SPOT 1)

SHEET TITLE:
TYPICAL SECTIONS SECTIONS TAXIWAY ALPHA

MSCAA NO. 18-1413-02
DWG. FILE NAME C-TS-03.DWG
DATE 03/17/2025
DWG NO. C-TS-03
SCALE
FACILITY NO. NONE
SHEET NO. 27 of 73

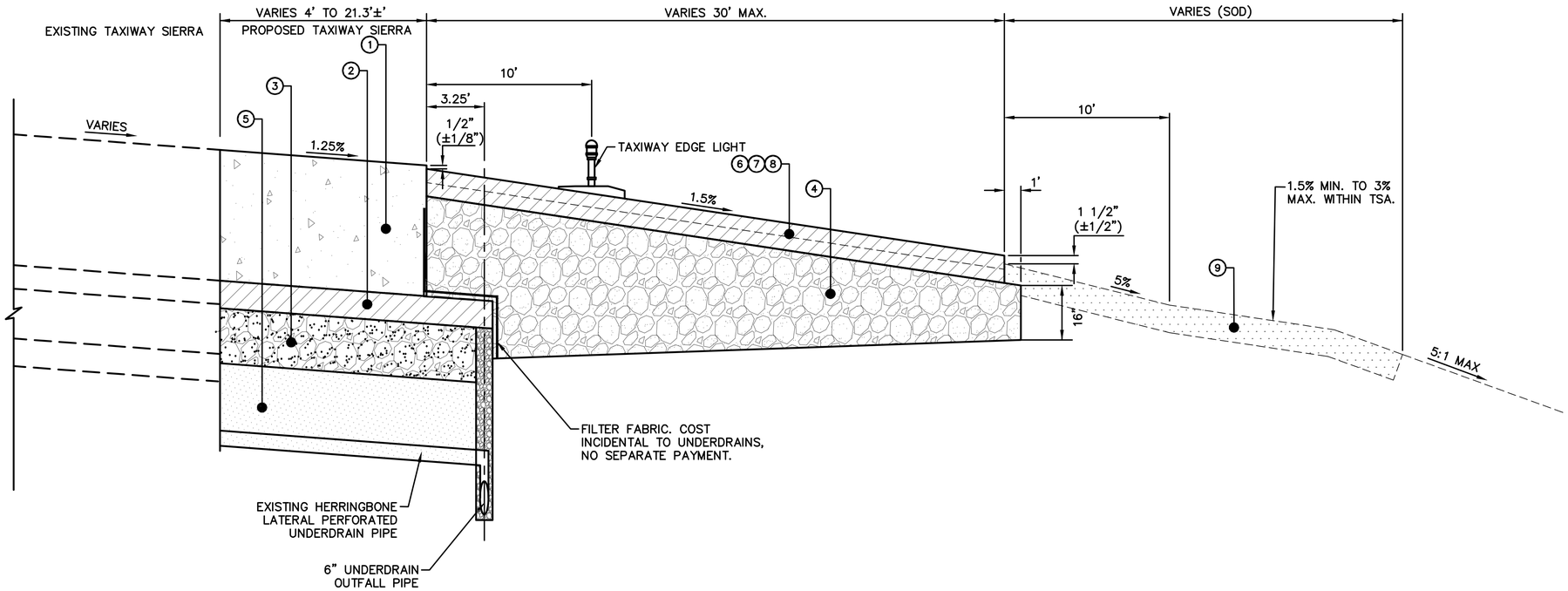

TYPICAL SHOULDER SECTION TAXIWAY SIERRA

STA. -3+48.40 TO STA. 0+72.49
STA. 2+90.64 TO STA. 4+01.20
STA. 5+20.66 TO STA. 6+26.45

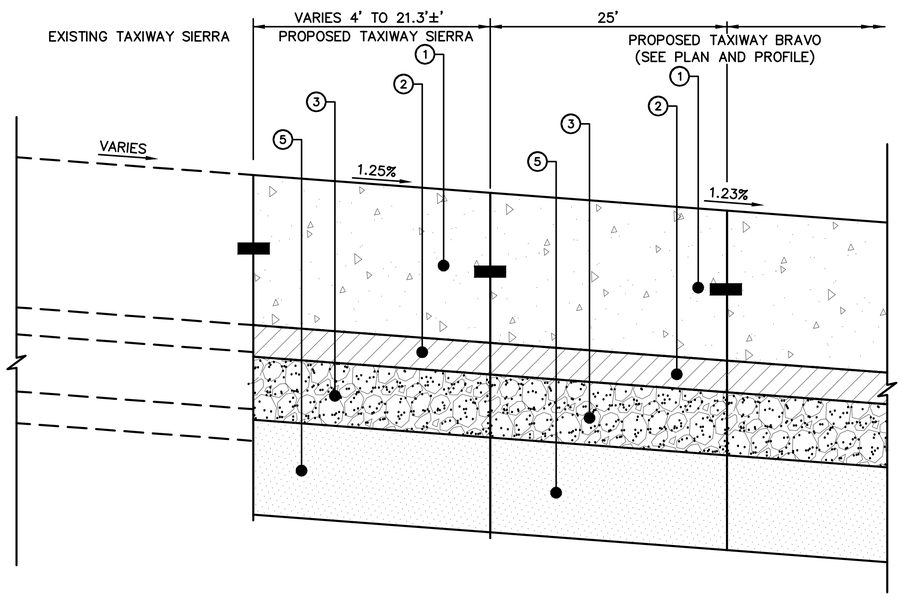

TYPICAL SHOULDER SECTION TAXIWAY SIERRA

STA. 0+72.49 TO STA. 2+90.64

	DESCRIPTION
1	P–501 – 19" THICK CEMENT CONCRETE PAVEMENT
2	P–307 – 6" THICK CEMENT TREATED PERMEABLE BASE COURSE
3	P–304 – 8" THICK CEMENT TREATED BASE COURSE WITH BITUMINOUS CURING SEAL – PLACE IN ONE LIFT
4	P–219 – VARIABLE THICKNESS (16" MIN.) AGGREGATE BASE COURSE
5	P–220 – 12" THICK CEMENT TREATED SUBGRADE PLACED IN TWO (2) 6" LIFTS
6	P–403 2–1/2" THICK BITUMINOUS SURFACE COURSE 2–1/2" THICK BITUMINOUS BASE COURSE
7	P–603 – BITUMINOUS TACK COAT, ESTIMATED AT 0.02–0.05 GAL/SY
8	P–602 – BITUMINOUS PRIME COAT, ESTIMATED AT 0.15–0.30 GAL/SY
9	T–905 – TURF TREATMENT CONSISTING OF ON–SITE TOP SOILING (4") T–904 – SODDING

MEMPHIS - SHELBY COUNTY AIRPORT AUTHORITY
MEMPHIS INTERNATIONAL AIRPORT
2491 WINCHESTER RD. SUITE 113
MEMPHIS, TENNESSEE
38116–3856

PROGRAM MANAGER
PARSONS
Program Management Consultant
Parsons Transportation Group Inc.
Project Office:
4225 Airways Blvd.
Memphis TN, 38116
JOB NO.

Allen&Hoshall
engineers-architects-surveyors
1661 INTERNATIONAL DRIVE
SUITE 100
MEMPHIS, TENNESSEE 38120
PHONE: 901–820–0820
FAX: 901–683–1001
JOB NO. 72198-B

ENGINEER–SUBCONSULTANT
POWERS HILL DESIGN
CIVIL ENGINEERING. CIVIL RESPONSIBILITY.
80 Monroe Avenue
Suite 420
Memphis, TN 38103
Tel: 901.543.8000
JOB NO.

DRAWN BY: RNP
CHECKED BY: HP
APPROVED BY: TG

WILLIAM T. GIBSON
REGISTERED ENGINEER
AGRICULTURE
OREGON
No. 104251
STATE OF TENNESSEE
3/17/25

ISSUED FOR BID

NO.	DESCRIPTION	DATE	BY
1	VALUE ENGINEERING	9/29/23	WTG

REVISIONS

PROJECT:
TAXIWAY BRAVO RECONFIGURATION (HOT SPOT 1)

SHEET TITLE:
TYPICAL SECTIONS
TAXIWAY SIERRA

MSCAA NO. 18-1413-02
DWG. FILE NAME C-TS-04.DWG
DATE 03/17/2025
DWG NO. C-TS-04
SCALE
FACILITY NO. NONE
SHEET NO. 28 of 73

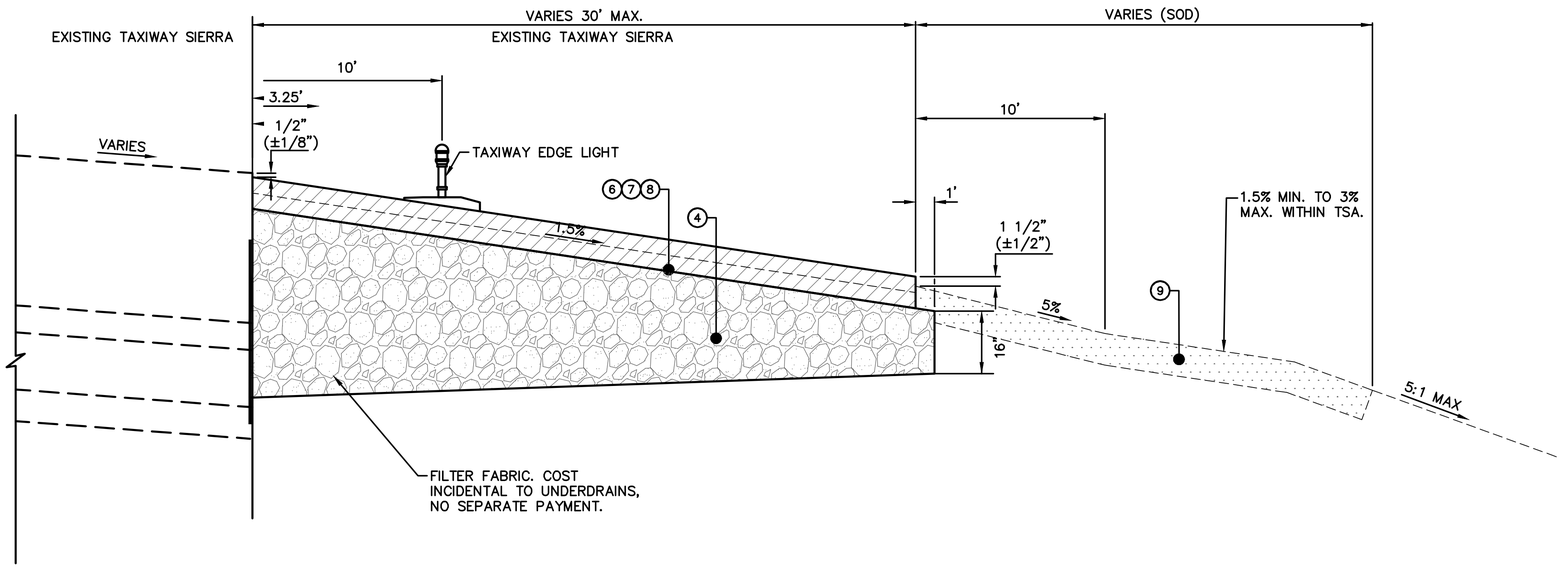

TYPICAL SHOULDER SECTION TAXIWAY SIERRA
STA. 4+01.20 TO STA. 5+20.66

	DESCRIPTION
1	P–501 – 19" THICK CEMENT CONCRETE PAVEMENT
2	P–307 – 6" THICK CEMENT TREATED PERMEABLE BASE COURSE
3	P–304 – 8" THICK CEMENT TREATED BASE COURSE WITH BITUMINOUS CURING SEAL – PLACE IN ONE LIFT
4	P–219 – VARIABLE THICKNESS (16" MIN.) AGGREGATE BASE COURSE
5	P–220 – 12" THICK CEMENT TREATED SUBGRADE PLACED IN TWO (2) 6" LIFTS
6	P–403 2–1/2" THICK BITUMINOUS SURFACE COURSE 2–1/2" THICK BITUMINOUS BASE COURSE
7	P–603 – BITUMINOUS TACK COAT, ESTIMATED AT 0.02–0.05 GAL/SY
8	P–602 – BITUMINOUS PRIME COAT, ESTIMATED AT 0.15–0.30 GAL/SY
9	T–905 – TURF TREATMENT CONSISTING OF ON–SITE TOP SOILING (4") T–904 – SODDING

MEMPHIS - SHELBY COUNTY AIRPORT AUTHORITY

MEMPHIS INTERNATIONAL AIRPORT
2491 WINCHESTER RD. SUITE 113
MEMPHIS, TENNESSEE
38116–3856

PROGRAM MANAGER
PARSONS
Program Management Consultant
Parsons Transportation Group Inc.
Project Office:
4225 Airways Blvd.
Memphis TN, 38116
JOB NO.

Allen&Hoshall
engineers-architects-surveyors
1661 INTERNATIONAL DRIVE
SUITE 100
MEMPHIS, TENNESSEE 38120
PHONE: 901–820–0820
FAX: 901–683–1001
JOB NO. 72198-B

ENGINEER–SUBCONSULTANT
POWERS HILL DESIGN
CIVIL ENGINEERING. CIVIL RESPONSIBILITY.
80 Monroe Avenue
Suite 420
Memphis, TN 38103
Tel: 901.543.8000
JOB NO.

DRAWN BY: RNP
CHECKED BY: HP
APPROVED BY: TG

WILLIAM T. GIBSON
REGISTERED ENGINEER
AGRICULTURE
OPERATIONS
No. 104251
STATE OF TENNESSEE
3/17/25

ISSUED FOR BID

NO.	DESCRIPTION	DATE	BY
1	VALUE ENGINEERING	9/29/23	WTG

REVISIONS

PROJECT:
TAXIWAY BRAVO RECONFIGURATION (HOT SPOT 1)

SHEET TITLE:
TYPICAL SHOULDER & TAXIWAY SIERRA

MSCAA NO. 18-1413-02
DWG. FILE NAME C-TS-05.DWG
DATE 03/17/2025
DWG NO. C-TS-05
SCALE
SHEET NO. 29 of 73
FACILITY NO. NONE

	DESCRIPTION
1	P–501 – 19" THICK CEMENT CONCRETE PAVEMENT
2	P–307 – 6" THICK CEMENT TREATED PERMEABLE BASE COURSE
3	P–304 – 8" THICK CEMENT TREATED BASE COURSE WITH BITUMINOUS CURING SEAL – PLACE IN ONE LIFT
4	P–219 – VARIABLE THICKNESS (16" MIN.) AGGREGATE BASE COURSE
5	P–220 – 12" THICK CEMENT TREATED SUBGRADE PLACED IN TWO (2) 6" LIFTS
6	P–403 2–1/2" THICK BITUMINOUS SURFACE COURSE 2–1/2" THICK BITUMINOUS BASE COURSE
7	P–603 – BITUMINOUS TACK COAT, ESTIMATED AT 0.02–0.05 GAL/SY
8	P–602 – BITUMINOUS PRIME COAT, ESTIMATED AT 0.15–0.30 GAL/SY
9	T–905 – TURF TREATMENT CONSISTING OF ON–SITE TOP SOILING (4") T–904 – SODDING

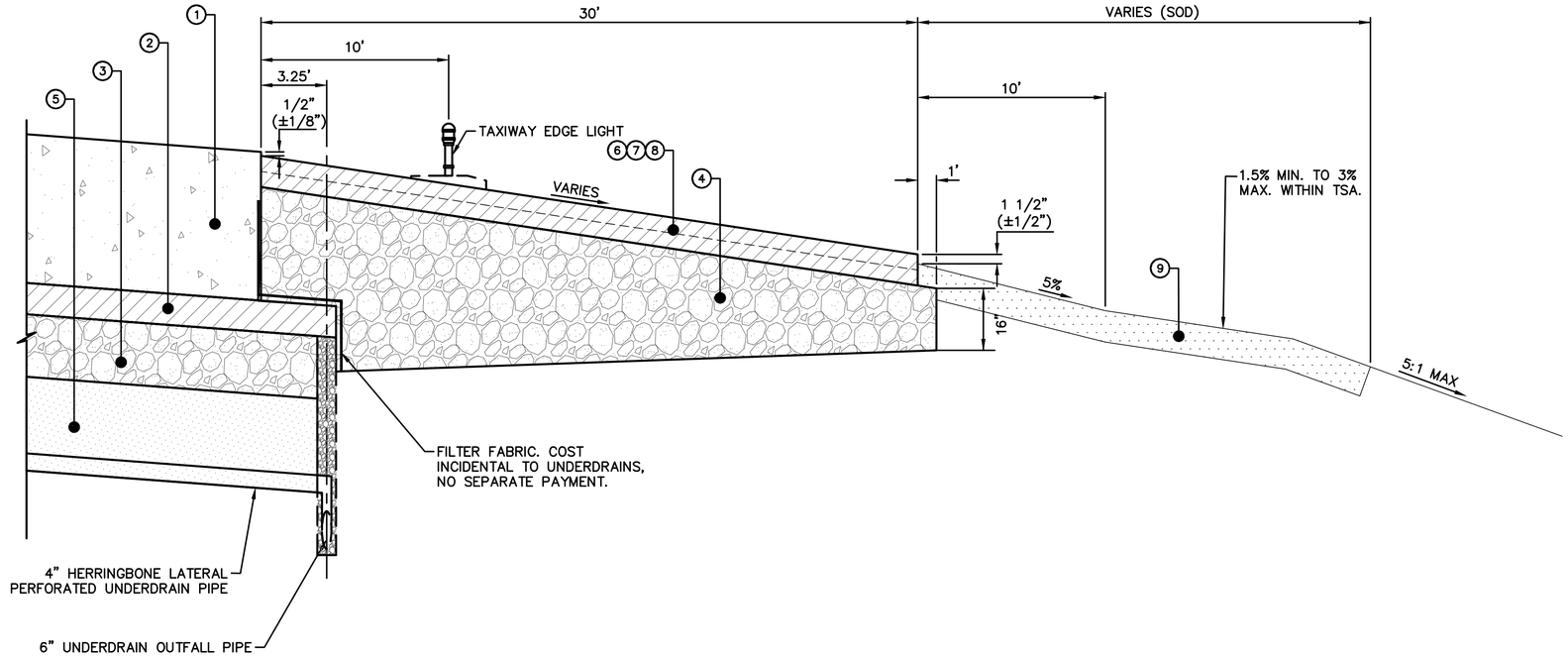

TYPICAL SECTION SECTION TAXIWAY A & B

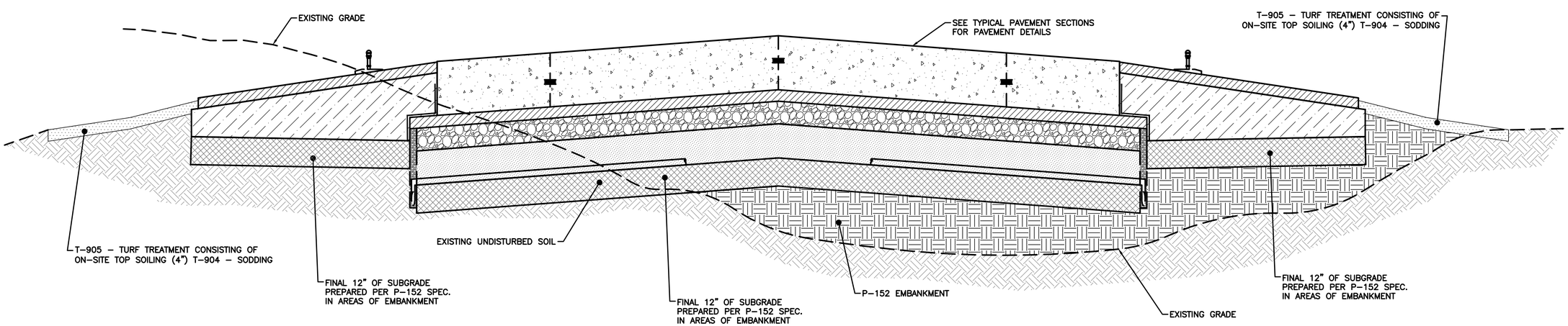

TYPICAL SECTION - SUBGRADE

MEMPHIS - SHELBY COUNTY AIRPORT AUTHORITY

MEMPHIS INTERNATIONAL AIRPORT
2491 WINCHESTER RD. SUITE 113
MEMPHIS, TENNESSEE
38116–3856

PROGRAM MANAGER
PARSONS
Program Management Consultant
Parsons Transportation Group Inc.
Project Office:
4225 Airways Blvd.
Memphis TN, 38116
JOB NO.

Allen&Hoshall
engineers-architects-surveyors
1661 INTERNATIONAL DRIVE
SUITE 100
MEMPHIS, TENNESSEE 38120
PHONE: 901–820–0820
FAX: 901–683–1001
JOB NO. 72198-B

ENGINEER–SUBCONSULTANT
POWERS HILL DESIGN
CIVIL ENGINEERING. CIVIL RESPONSIBILITY.
80 Monroe Avenue
Suite 420
Memphis, TN 38103
Tel: 901.543.8000
JOB NO.

DRAWN BY: RNP
CHECKED BY: HP
APPROVED BY: TG

WILLIAM T. GIBSON REGISTERED ENGINEER AGRICULTURE No. 104251 STATE OF TENNESSEE
3/13/25

ISSUED FOR BID

NO.	DESCRIPTION	DATE	BY
1	VALUE ENGINEERING	9/29/23	WTG

REVISIONS

PROJECT:
TAXIWAY BRAVO RECONFIGURATION (HOT SPOT 1)

SHEET TITLE:
TYPICAL SHOULDER & SUBGRADE SECTIONS TAXIWAY BRAVO & TAXIWAY ALPHA

MSCAA NO. 18-1413-02
DWG. FILE NAME C-TS-06.DWG
DATE 03/17/2025
DWG NO. C-TS-06
SCALE
SHEET NO. 30 of 73
FACILITY NO. NONE

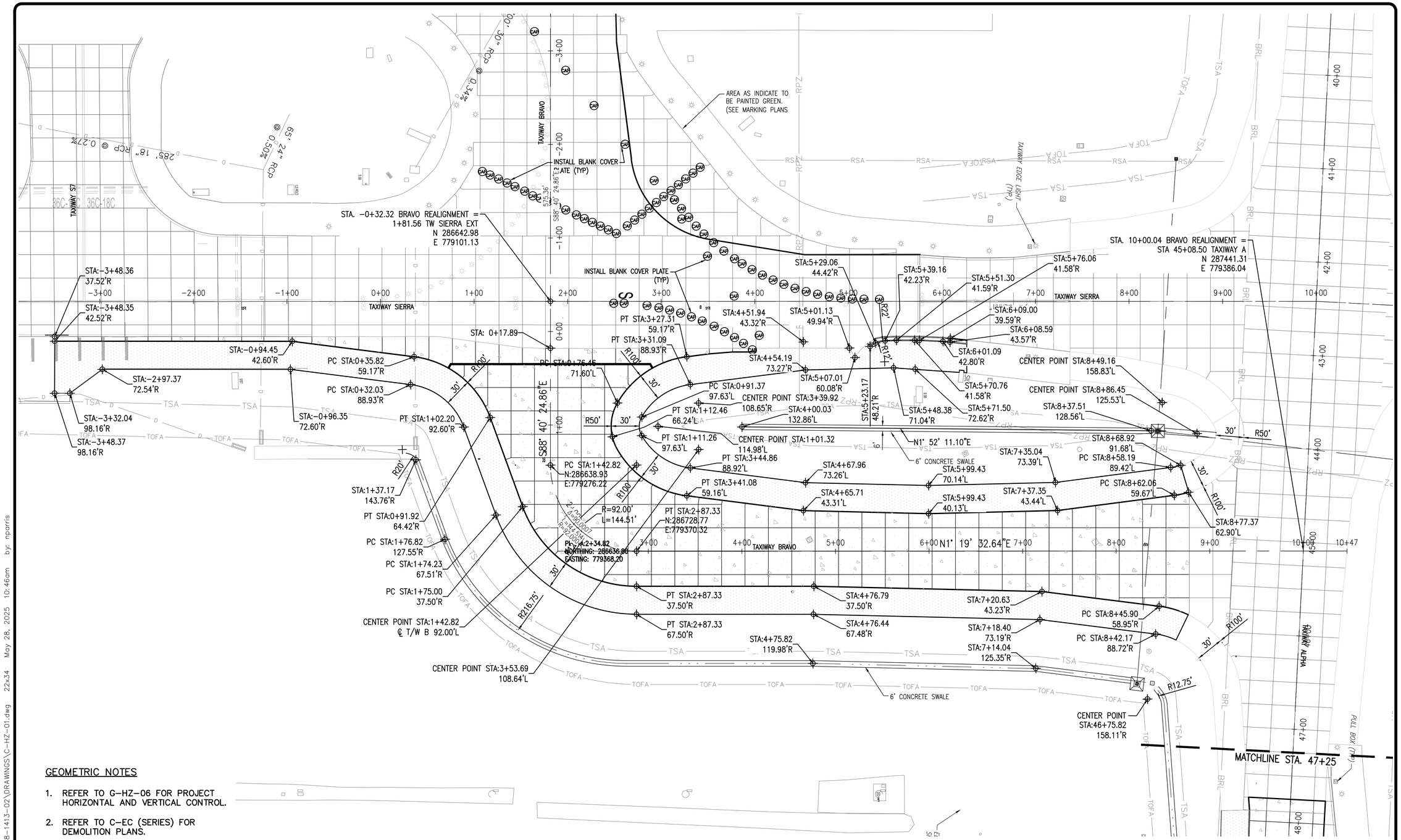

GEOMETRIC NOTES

1. REFER TO G-HZ-06 FOR PROJECT HORIZONTAL AND VERTICAL CONTROL.
2. REFER TO C-EC (SERIES) FOR DEMOLITION PLANS.
3. REFER TO C-JT (SERIES) FOR PAVEMENT JOINT LAYOUT PLANS.

PROPOSED PAVEMENT LEGEND

- PORTLAND CEMENT CONCRETE PAVEMENT (FULL STRENGTH)
- ASPHALTIC CONCRETE PAVEMENT (SHOULDERS)

0' 25' 50' 100'
FULL SIZE SCALE: 1"=50'
HALF SIZE SCALE: 1"=100'

PROJECT CONTROL POINTS AND SURVEY BENCHMARKS

CPT NO.	NORTH	EAST	ELEV.	DESCRIPTION
AP67	287826.47	775321.87	253.29	ALUM. SURV. DISK "MSCAA PRIMARY CONTROL PNT. 67"

CONTROL POINT NOTES:
1. THESE VALUES ARE BASED ON GPS OBSERVATIONS SPECIFIC TO THIS PROJECT AND DIFFER FROM THE MSCAA PUBLISHED VALUES DATED MAY 2008.
2. THE VALUES SHOWN ABOVE WERE USED FOR THIS DESIGN PROJECT AND ARE RELATIVE TO ANY/ALL COORDINATES OR BEARINGS SHOWN HEREIN.
3. COORDINATES ARE TENNESSEE STATE PLANE, NAD 83

KEYMAP

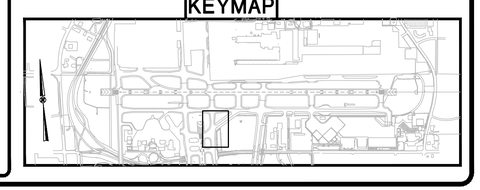

MEMPHIS - SHELBY COUNTY AIRPORT AUTHORITY
MEMPHIS INTERNATIONAL AIRPORT
2491 WINCHESTER RD. SUITE 113
MEMPHIS, TENNESSEE
38116-3856

PROGRAM MANAGER
PARSONS
Program Management Consultant
Parsons Transportation Group Inc.
Project Office:
4225 Airways Blvd.
Memphis TN, 38116
JOB NO.

Allen&Hoshall
engineers-architects-surveyors
1661 INTERNATIONAL DRIVE
SUITE 100
MEMPHIS, TENNESSEE 38120
PHONE: 901-820-0820
FAX: 901-683-1001
JOB NO. 72198-B

ENGINEER-SUBCONSULTANT
POWERS HILL DESIGN
CIVIL ENGINEERING. CIVIL RESPONSIBILITY.
80 Monroe Avenue
Suite 420
Memphis, TN 38103
Tel: 901.543.8000
JOB NO.

DRAWN BY: GD
CHECKED BY: SH
APPROVED BY: SH

WILLIAM T. GIBSON REGISTERED ENGINEER AGRICULTURE No. 104251 STATE OF TENNESSEE 3/17/25

ISSUED FOR BID

NO.	DESCRIPTION	DATE	BY

REVISIONS

PROJECT:
TAXIWAY BRAVO RECONFIGURATION (HOT SPOT 1)

SHEET TITLE:
GEOMETRIC LAYOUT PLAN TAXIWAY BRAVO STA. 0+17.89 TO STA. 8+78.23

MSCAA NO. 18-1413-02
DWG. FILE NAME C-HZ-01.DWG
DATE 03/17/2025
DWG NO. C-HZ-01
SCALE 1"=50'
SHEET NO. 31 of 73
FACILITY NO. NONE

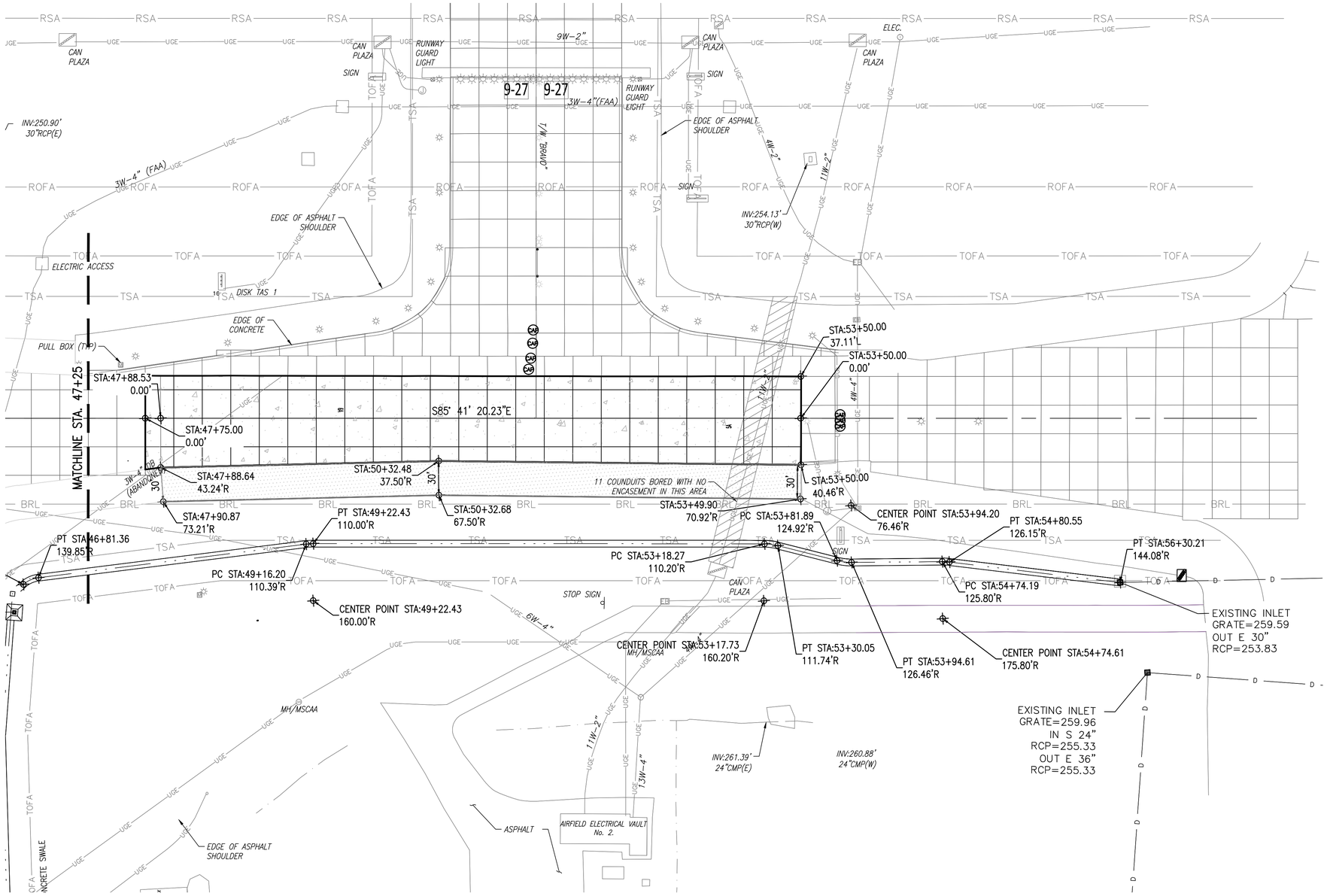

GEOMETRIC NOTES

1. REFER TO G-HZ-06 FOR PROJECT HORIZONTAL AND VERTICAL CONTROL.
2. REFER TO C-EC (SERIES) FOR DEMOLITION PLANS.
3. REFER TO C-JT (SERIES) FOR PAVEMENT JOINT LAYOUT PLANS.

PROPOSED PAVEMENT LEGEND

PORTLAND CEMENT CONCRETE PAVEMENT (FULL STRENGTH)

ASPHALTIC CONCRETE PAVEMENT (SHOULDERS)

0' 25' 50' 100'
FULL SIZE SCALE: 1"=50'
HALF SIZE SCALE: 1"=100'

PROJECT CONTROL POINTS AND SURVEY BENCHMARKS

CPT NO.	COORDINATES NORTH	EAST	ELEV.	DESCRIPTION
AP67	287826.47	775321.87	253.29	ALUM. SURV. DISK "MSCAA PRIMARY CONTROL PNT. 67"

CONTROL POINT NOTES:
1. THESE VALUES ARE BASED ON GPS OBSERVATIONS SPECIFIC TO THIS PROJECT AND DIFFER FROM THE MSCAA PUBLISHED VALUES DATED MAY 2008.
2. THE VALUES SHOWN ABOVE WERE USED FOR THIS DESIGN PROJECT AND ARE RELATIVE TO ANY/ALL COORDINATES OR BEARINGS SHOWN HEREIN.
3. COORDINATES ARE TENNESSEE STATE PLANE, NAD 83

KEYMAP

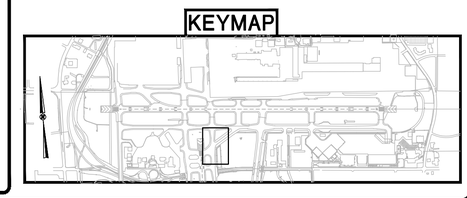

MEMPHIS - SHELBY COUNTY AIRPORT AUTHORITY

MEMPHIS INTERNATIONAL AIRPORT
2491 WINCHESTER RD. SUITE 113
MEMPHIS, TENNESSEE
38116-3856

PROGRAM MANAGER
PARSONS
Program Management Consultant
Parsons Transportation Group Inc.
Project Office:
4225 Airways Blvd.
Memphis TN, 38116
JOB NO.

Allen&Hoshall
engineers-architects-surveyors
1661 INTERNATIONAL DRIVE
SUITE 100
MEMPHIS, TENNESSEE 38120
PHONE: 901-820-0820
FAX: 901-683-1001
JOB NO. 72198-B

ENGINEER-SUBCONSULTANT
POWERS HILL DESIGN
CIVIL ENGINEERING. CIVIL RESPONSIBILITY.
80 Monroe Avenue
Suite 420
Memphis, TN 38103
Tel: 901.543.8000
JOB NO.

DRAWN BY: GD
CHECKED BY: SH
APPROVED BY: SH

WILLIAM T. GIBSON REGISTERED ENGINEER AGRICULTURE No. 104251 STATE OF TENNESSEE
3/17/25

ISSUED FOR BID

NO.	DESCRIPTION	DATE	BY

REVISIONS

PROJECT:
TAXIWAY BRAVO RECONFIGURATION (HOT SPOT 1)

SHEET TITLE:
GEOMETRIC LAYOUT PLAN TAXIWAY ALPHA STA. 47+25.00 TO STA. 53+50.00

MSCAA NO. 18-1413-02
DWG. FILE NAME C-HZ-02.DWG
DATE 03/17/2025
DWG NO. C-HZ-02
SCALE 1"=50'
SHEET NO. 32 of 73
FACILITY NO. NONE

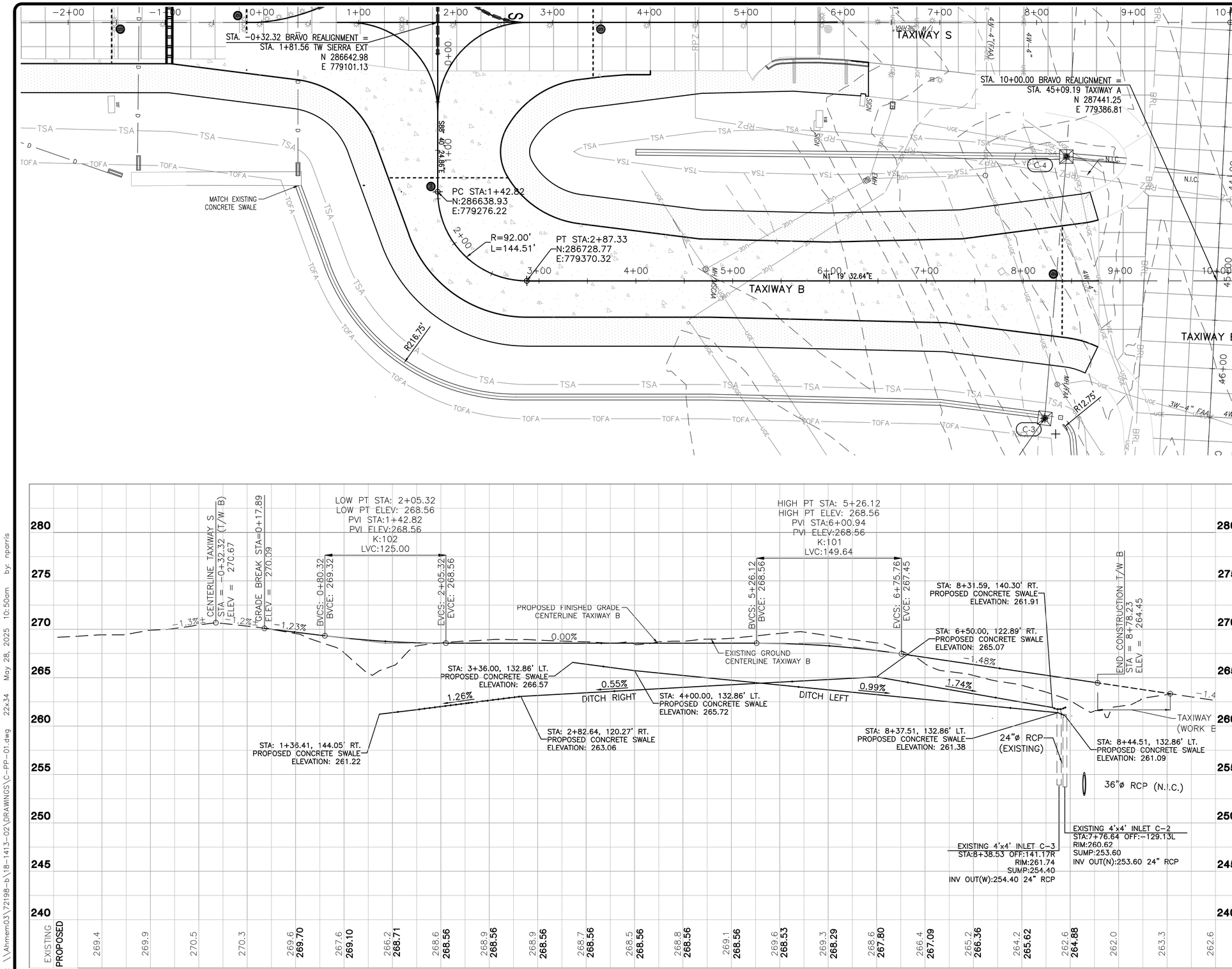

LEGEND

- PORTLAND CEMENT CONCRETE PAVEMENT (FULL STRENGTH) (P-501)
- ASPHALTIC CONCRETE PAVEMENT (SHOULDERS) (S-401)
- ASPHALTIC CONCRETE PAVEMENT (TAXILANE) (S-401)
- ASPHALTIC CONCRETE PAVEMENT (ACCESS ROAD) (S-401)
- 0.25% PROPOSED CENTERLINE GRADE
- EXISTING CENTERLINE GRADE
- EXISTING / PROPOSED CENTERLINE ELEVATION

GENERAL NOTES

1. REFER TO SHEET G-HZ-06 (PROJECT HORIZONTAL AND VERTICAL CONTROL) FOR HORIZONTAL CONTROL.
2. EXISTING UNDERGROUND FACILITIES SHOWN ARE LOCATED FROM AVAILABLE SURFACE INFORMATION, MAPS, PLANS AND OTHER RECORDS. LOCATIONS AND ELEVATIONS SHOWN ARE APPROXIMATE AND ARE BASED ON THE INFORMATION AVAILABLE. CONTRACTOR IS RESPONSIBLE FOR FIELD VERIFYING EXACT LOCATION AND DEPTH OF UTILITIES AND PROTECTING THOSE UTILITIES BEFORE EXCAVATING AND DURING CONSTRUCTION.
3. REFER TO GRADING, DRAINAGE AND EROSION CONTROL PLANS (SERIES C-GR) FOR LOCATION, SIZE AND STRUCTURE DETAILS.
4. REFER TO EXISTING CONDITIONS AND DEMOLITION PLANS (SERIES C-EC) FOR UTILITY MODIFICATIONS.
5. REFER TO ELECTRICAL PLANS (SERIES E) FOR AIRFIELD LIGHTING AND SIGNAGE SYSTEMS.
6. VERIFY EXISTING ELEVATIONS ALONG ALL EDGES WHERE NEW PAVEMENT MATCHES EXISTING.
7. ELEVATIONS FOR PROPOSED ELECTRICAL LINES AND DUCTS BANK SHOWN IN PROFILES ARE APPROXIMATE. REFER TO ELECTRICAL PLANS AND DETAILS FOR ELECTRICAL LINE AND DUCT BANK PLACEMENT BELOW GRADE.

0' 25' 50' 100'
FULL SIZE SCALE: 1"=50'
HALF SIZE SCALE: 1"=100'

VERTICAL
0' 5' 10'
FULL SIZE SCALE: 1"=5'
HALF SIZE SCALE: 1"=10'

MEMPHIS - SHELBY COUNTY AIRPORT AUTHORITY
MEMPHIS INTERNATIONAL AIRPORT
2491 WINCHESTER RD. SUITE 113
MEMPHIS, TENNESSEE
38116-3856

PROGRAM MANAGER
PARSONS
Program Management Consultant
Parsons Transportation Group Inc.
Project Office:
4225 Airways Blvd.
Memphis TN, 38116
JOB NO. XXXXX

Allen&Hoshall
engineers-architects-surveyors
1661 INTERNATIONAL DRIVE
SUITE 100
MEMPHIS, TENNESSEE 38120
PHONE: 901-820-0820
FAX: 901-683-1001
JOB NO. 72198

ENGINEER-SUBCONSULTANT
POWERS HILL DESIGN
CIVIL ENGINEERING. CIVIL RESPONSIBILITY.
80 Monroe Avenue
Suite 420
Memphis, TN 38103
Tel: 901.543.8000
JOB NO. XXXXXX

DRAWN BY: RNP
CHECKED BY: HP
APPROVED BY: TG

WILLIAM T. GIBSON
REGISTERED ENGINEER
AGRICULTURE
No. 104251
STATE OF TENNESSEE
7/23/24

ISSUED FOR BID

NO.	DESCRIPTION	DATE	BY

REVISIONS

PROJECT:
TAXIWAY BRAVO RECONFIGURATION (HOT SPOT 1)

SHEET TITLE:
PLAN AND PROFILE TAXIWAY BRAVO STA. 0+17.89 TO STA. 9+24.90

MSCAA NO. 18-1413-02
DWG. FILE NAME C-PP-01.DWG
DATE 07/23/24
DWG NO. C-PP-01
SCALE AS SHOWN
SHEET NO. 33 of 73
FACILITY NO. NONE

Drawing name: \\Ahmem03\72198-b\18-1413-02\DRAWINGS\C-PP-01.dwg 22x34 May 28, 2025 10:50am by: nparris

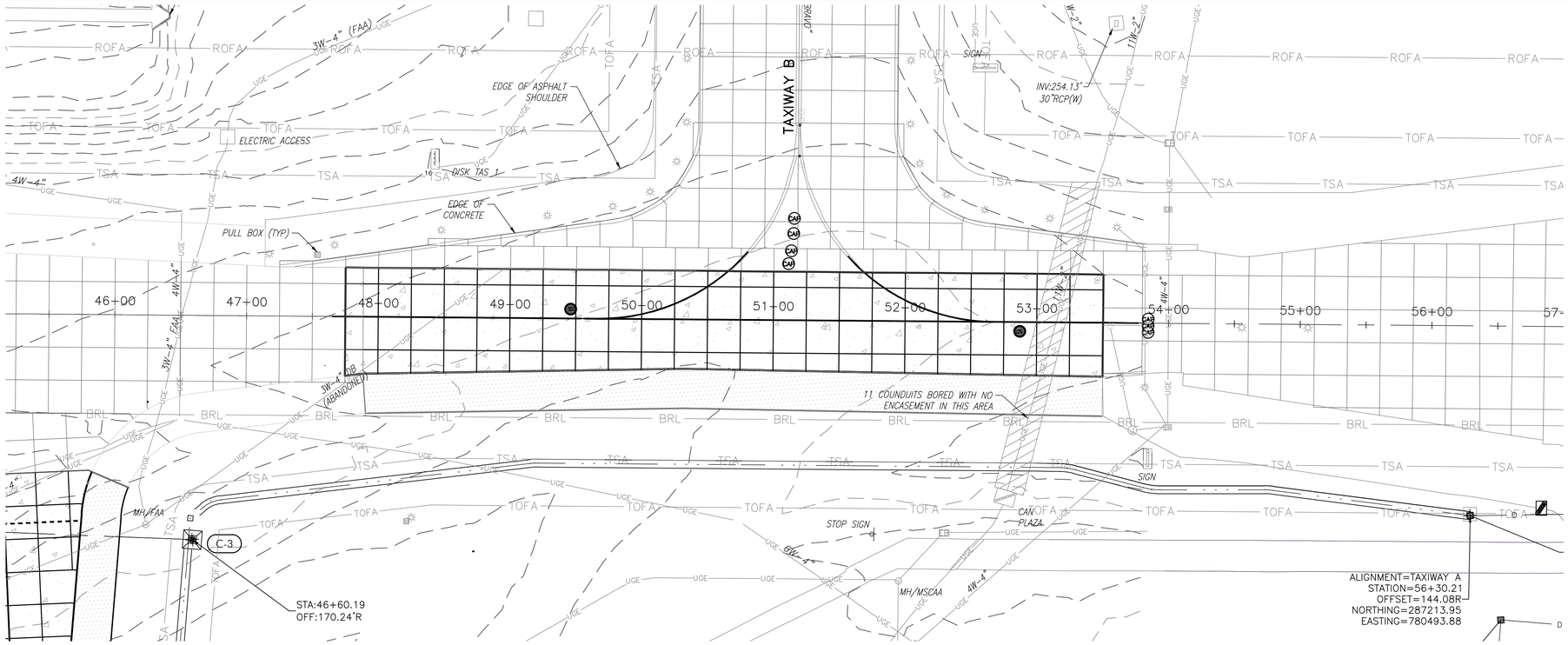

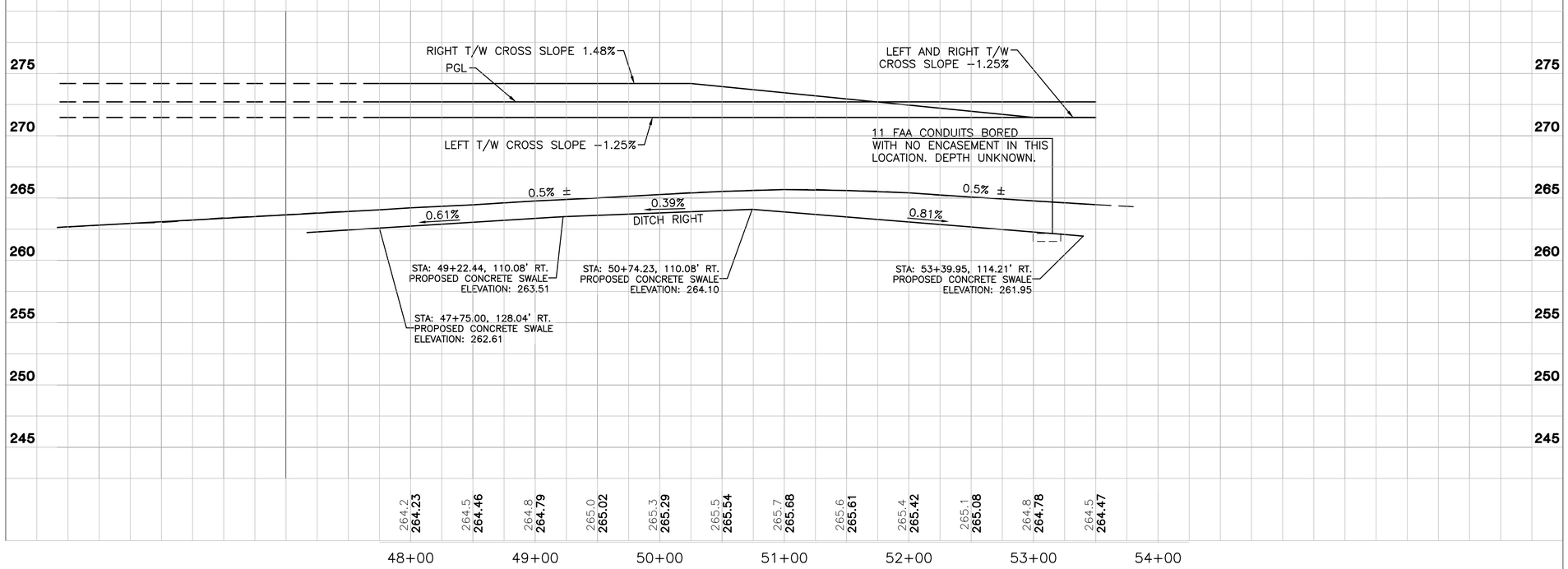

LEGEND

- PORTLAND CEMENT CONCRETE PAVEMENT (FULL STRENGTH) (P-501)
- ASPHALTIC CONCRETE PAVEMENT (SHOULDERS) (S-401)
- ASPHALTIC CONCRETE PAVEMENT (TAXILANE) (S-401)
- ASPHALTIC CONCRETE PAVEMENT (ACCESS ROAD) (S-401)
- 0.25% PROPOSED CENTERLINE GRADE
- EXISTING CENTERLINE GRADE
- EXISTING / PROPOSED CENTERLINE ELEVATION

GENERAL NOTES

1. REFER TO SHEET G-HZ-06 (PROJECT HORIZONTAL AND VERTICAL CONTROL) FOR HORIZONTAL CONTROL.
2. EXISTING UNDERGROUND FACILITIES SHOWN ARE LOCATED FROM AVAILABLE SURFACE INFORMATION, MAPS, PLANS AND OTHER RECORDS. LOCATIONS AND ELEVATIONS SHOWN ARE APPROXIMATE AND ARE BASED ON THE INFORMATION AVAILABLE. CONTRACTOR IS RESPONSIBLE FOR FIELD VERIFYING EXACT LOCATION AND DEPTH OF UTILITIES AND PROTECTING THOSE UTILITIES BEFORE EXCAVATING AND DURING CONSTRUCTION.
3. REFER TO GRADING, DRAINAGE AND EROSION CONTROL PLANS (SERIES C-GR) FOR LOCATION, SIZE AND STRUCTURE DETAILS.
4. REFER TO EXISTING CONDITIONS AND DEMOLITION PLANS (SERIES C-EC) FOR UTILITY MODIFICATIONS.
5. REFER TO ELECTRICAL PLANS (SERIES E) FOR AIRFIELD LIGHTING AND SIGNAGE SYSTEMS.
6. VERIFY EXISTING ELEVATIONS ALONG ALL EDGES WHERE NEW PAVEMENT MATCHES EXISTING.
7. ELEVATIONS FOR PROPOSED ELECTRICAL LINES AND DUCTS BANK SHOWN IN PROFILES ARE APPROXIMATE. REFER TO ELECTRICAL PLANS AND DETAILS FOR ELECTRICAL LINE AND DUCT BANK PLACEMENT BELOW GRADE.

0' 25' 50' 100'
FULL SIZE SCALE: 1"=50'
HALF SIZE SCALE: 1"=100'

VERTICAL
0' 5' 10'
FULL SIZE SCALE: 1"=5'
HALF SIZE SCALE: 1"=10'

MEMPHIS - SHELBY COUNTY AIRPORT AUTHORITY
MEMPHIS INTERNATIONAL AIRPORT
2491 WINCHESTER RD. SUITE 113
MEMPHIS, TENNESSEE
38116-3856

PROGRAM MANAGER
PARSONS
Program Management Consultant
Parsons Transportation Group Inc.
Project Office:
4225 Airways Blvd.
Memphis TN, 38116
JOB NO. XXXXX

Allen&Hoshall
engineers-architects-surveyors
1661 INTERNATIONAL DRIVE
SUITE 100
MEMPHIS, TENNESSEE 38120
PHONE: 901-820-0820
FAX: 901-683-1001
JOB NO. 72198

ENGINEER-SUBCONSULTANT
POWERS HILL DESIGN
CIVIL ENGINEERING. CIVIL RESPONSIBILITY.
80 Monroe Avenue
Suite 420
Memphis, TN 38103
Tel: 901.543.8000
JOB NO. XXXXXX

DRAWN BY: RNP
CHECKED BY: HP
APPROVED BY: TG

WILLIAM T. GIBSON REGISTERED ENGINEER AGRICULTURE No. 104251 STATE OF TENNESSEE
William T. Gibson 7/23/24

ISSUED FOR BID

NO.	DESCRIPTION	DATE	BY

REVISIONS

PROJECT:
TAXIWAY BRAVO RECONFIGURATION (HOT SPOT 1)

SHEET TITLE:
PLAN AND PROFILE TAXIWAY ALPHA STA. 47+25.00 TO STA. 53+50.00

MSCAA NO. 18-1413-02
DWG. FILE NAME C-PP-02.DWG
DATE 07/23/24
DWG NO. C-PP-02
SCALE AS SHOWN
SHEET NO. 34 of 73
FACILITY NO. NONE

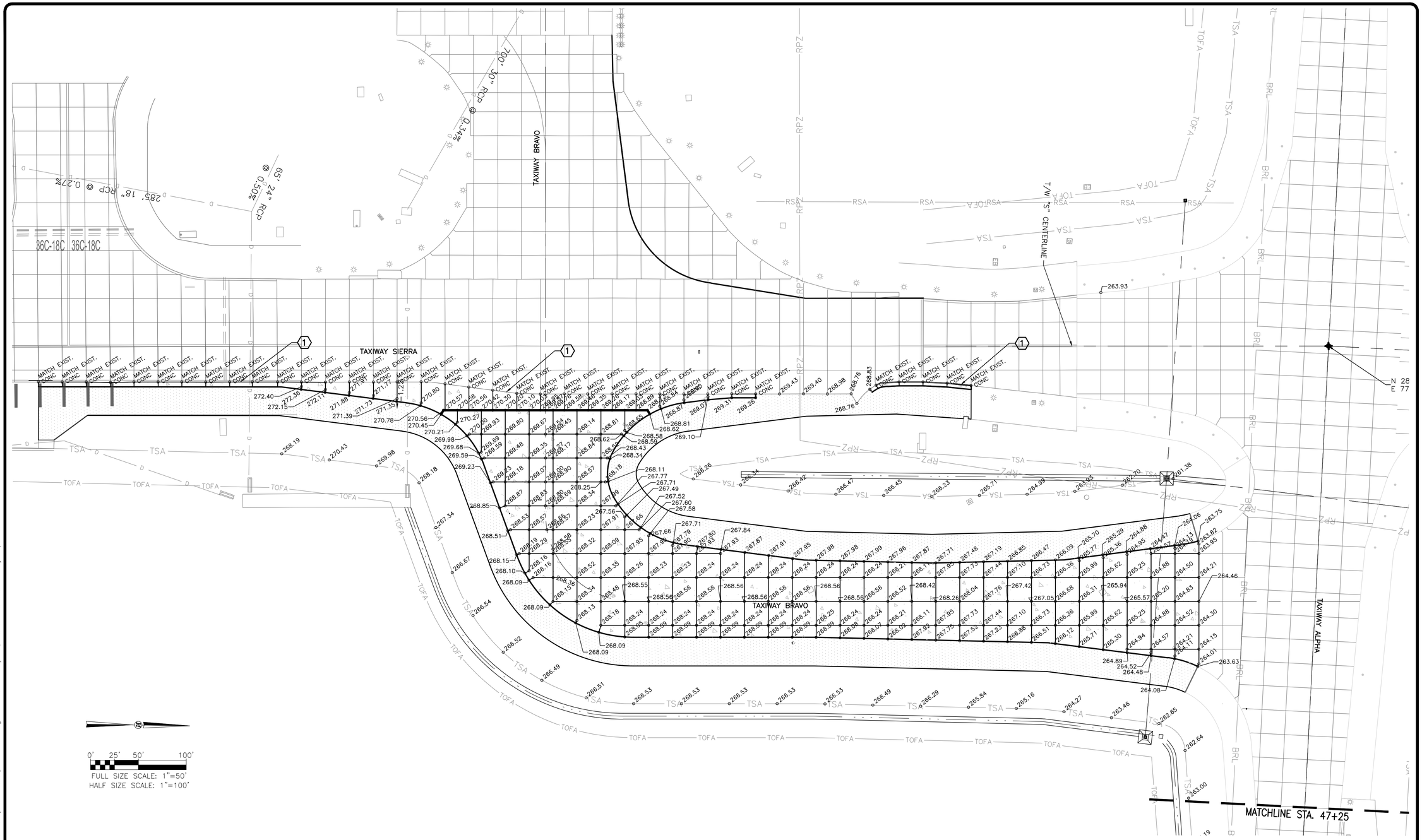

NOTES

1. SEE SERIES C-JT FOR JOINT LAYOUT AND SPACING.
2. CONTRACTOR TO VERIFY EXISTING CONCRETE ELEVATIONS AT CONNECTOR TAXIWAY TIE-IN'S PRIOR TO CONSTRUCTION AND MATCH EXISTING ELEVATIONS.

CONSTRUCTION NOTES

(1) VERIFY AND MATCH EXISTING ELEVATIONS

NOTE

1. ELEVATIONS SHOWN ARE TO THE TOP OF P-501 (CONCRETE) AND TO THE TOP OUTSIDE EDGE OF THE P-403 (ASPHALT) (SEE TYPICAL SECTION SHEETS.)
2. CONTRACTOR SHALL INSURE .04' DROP WHERE SHOULDER MEETS EDGE OF CONCRETE TAXIWAY (SEE TYPICAL SECTIONS.)

KEYMAP

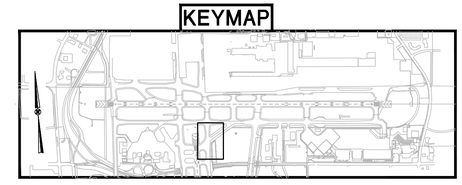

MEMPHIS - SHELBY COUNTY AIRPORT AUTHORITY

MEMPHIS INTERNATIONAL AIRPORT
2491 WINCHESTER RD. SUITE 113
MEMPHIS, TENNESSEE
38116-3856

PROGRAM MANAGER
PARSONS
Program Management Consultant
Parsons Transportation Group Inc.
Project Office:
4225 Airways Blvd.
Memphis TN, 38116
JOB NO.

Allen&Hoshall
engineers-architects-surveyors
1661 INTERNATIONAL DRIVE
SUITE 100
MEMPHIS, TENNESSEE 38120
PHONE: 901-820-0820
FAX: 901-683-1001
JOB NO. 72198-B

ENGINEER-SUBCONSULTANT
POWERS HILL DESIGN
CIVIL ENGINEERING. CIVIL RESPONSIBILITY.
80 Monroe Avenue
Suite 420
Memphis, TN 38103
Tel: 901.543.8000
JOB NO.

DRAWN BY: GD
CHECKED BY: SH
APPROVED BY: SH

WILLIAM T. GIBSON REGISTERED ENGINEER AGRICULTURE No. 104251 STATE OF TENNESSEE 3/13/25

ISSUED FOR BID

NO.	DESCRIPTION	DATE	BY

REVISIONS

PROJECT:

TAXIWAY BRAVO RECONFIGURATION (HOT SPOT 1)

SHEET TITLE:

PAVEMENT ELEVATION PLAN TAXIWAY BRAVO STA. 0+17.89 TO STA. 9+24.90

MSCAA NO. 18-1413-02
DWG. FILE NAME C-PE-01.DWG
DATE 03/17/2025
DWG NO. C-PE-01
SCALE 1"=50'
SHEET NO. 35 of 73
FACILITY NO. NONE

Drawing name: \\Ahmem03\72198-b\18-1413-02\DRAWINGS\C-PE-01.dwg 22x34 May 28, 2025 10:50am by: nparris

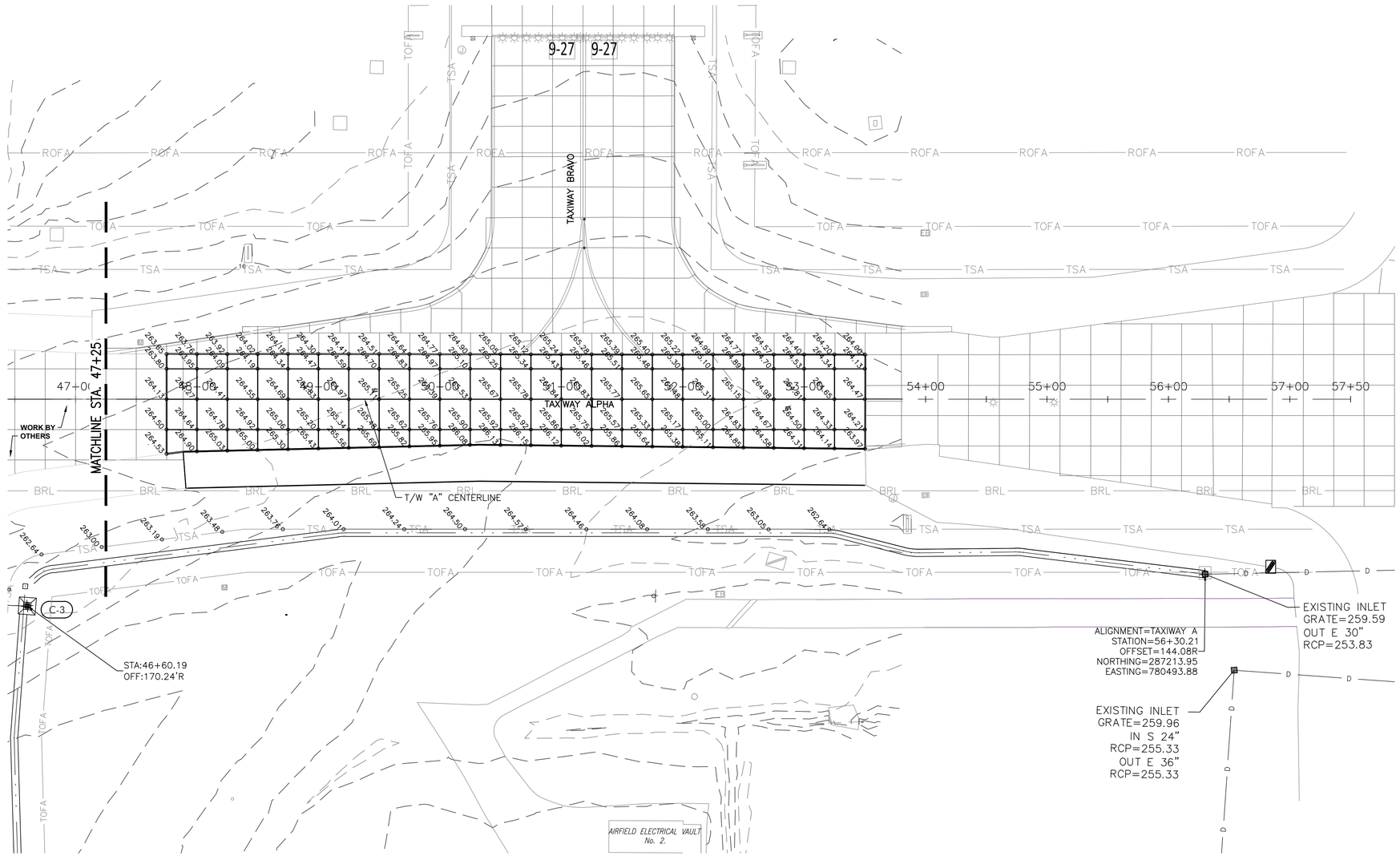

0' 25' 50' 100'
FULL SIZE SCALE: 1"=50'
HALF SIZE SCALE: 1"=100'

NOTES

1. SEE SERIES C-JT FOR JOINT LAYOUT AND SPACING.
2. CONTRACTOR TO VERIFY EXISTING CONCRETE ELEVATIONS AT CONNECTOR TAXIWAY TIE-IN'S PRIOR TO CONSTRUCTION AND MATCH EXISTING ELEVATIONS.

CONSTRUCTION NOTES

(1) VERIFY AND MATCH EXISTING ELEVATIONS

NOTE

1. ELEVATIONS SHOWN ARE TO THE TOP OF P-501 (CONCRETE) AND TO THE TOP OUTSIDE EDGE OF THE P-403 (ASPHALT) (SEE TYPICAL SECTION SHEETS.)
2. CONTRACTOR SHALL INSURE .04' DROP WHERE SHOULDER MEETS EDGE OF CONCRETE TAXIWAY (SEE TYPICAL SECTIONS.)

KEYMAP

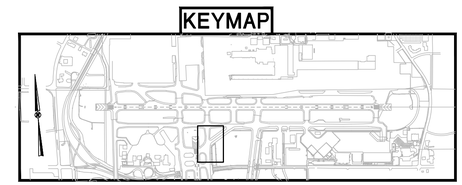

MEMPHIS - SHELBY COUNTY AIRPORT AUTHORITY
MEMPHIS INTERNATIONAL AIRPORT
2491 WINCHESTER RD. SUITE 113
MEMPHIS, TENNESSEE
38116-3856

PROGRAM MANAGER
PARSONS
Program Management Consultant
Parsons Transportation Group Inc.
Project Office:
4225 Airways Blvd.
Memphis TN, 38116
JOB NO.

Allen&Hoshall
engineers-architects-surveyors
1661 INTERNATIONAL DRIVE
SUITE 100
MEMPHIS, TENNESSEE 38120
PHONE: 901-820-0820
FAX: 901-683-1001
JOB NO. 72198-B

ENGINEER-SUBCONSULTANT
POWERS HILL DESIGN
CIVIL ENGINEERING. CIVIL RESPONSIBILITY.
80 Monroe Avenue
Suite 420
Memphis, TN 38103
Tel: 901.543.8000
JOB NO.

DRAWN BY: GD
CHECKED BY: SH
APPROVED BY: SH

WILLIAM T. GIBSON
REGISTERED ENGINEER
AGRICULTURE
No. 104251
STATE OF TENNESSEE
3/17/25

ISSUED FOR BID

NO.	DESCRIPTION	DATE	BY

REVISIONS

PROJECT:
TAXIWAY BRAVO RECONFIGURATION (HOT SPOT 1)

SHEET TITLE:
PAVEMENT ELEVATION PLAN TAXIWAY ALPHA STA. 47+25.00 TO STA. 53+50.00

MSCAA NO. 18-1413-02
DWG. FILE NAME C-PE-02.DWG
DATE 03/17/2025
DWG NO. C-PE-02
SCALE 1"=50'
SHEET NO. 36 of 73
FACILITY NO. NONE

Drawing name: \\Ahmem03\72198-b\18-1413-02\DRAWINGS\C-PE-02.dwg 22x34 May 28, 2025 10:50am by: nparris

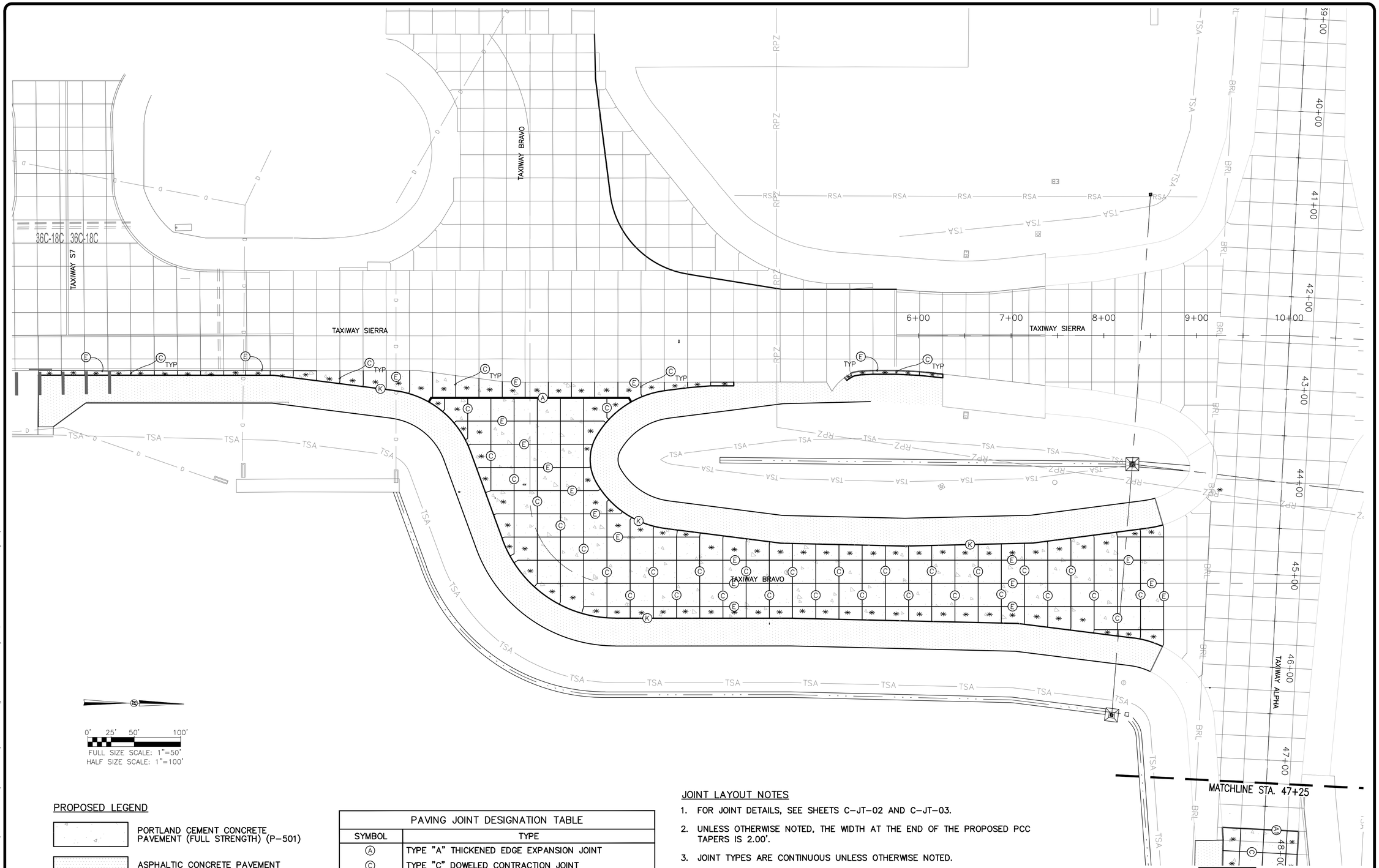

PROPOSED LEGEND

- PORTLAND CEMENT CONCRETE PAVEMENT (FULL STRENGTH) (P-501)
- ASPHALTIC CONCRETE PAVEMENT (SHOULDERS) (P-401)

PAVING JOINT DESIGNATION TABLE	
SYMBOL	TYPE
Ⓐ	TYPE "A" THICKENED EDGE EXPANSION JOINT
Ⓒ	TYPE "C" DOWELED CONTRACTION JOINT
Ⓔ	TYPE "E" DOWELED CONSTRUCTION JOINT
Ⓚ	TYPE "K" BUTT CONSTRUCTION JOINT
Ⓚ1	TYPE "K" BUTT CONSTRUCTION JOINT
Ⓐ1	TYPE "A1" THICKENED EDGE EXPANSION JOINT
✱	REINFORCED PANEL

JOINT LAYOUT NOTES

1. FOR JOINT DETAILS, SEE SHEETS C-JT-02 AND C-JT-03.
2. UNLESS OTHERWISE NOTED, THE WIDTH AT THE END OF THE PROPOSED PCC TAPERS IS 2.00'.
3. JOINT TYPES ARE CONTINUOUS UNLESS OTHERWISE NOTED.
4. THE CONTRACTOR MAY PROPOSE AN ALTERNATE JOINT LAYOUT PLAN TO MATCH THE PAVING PLAN, FOR REVIEW BY THE PROGRAM MANAGER.
5. REFER TO GEOMETRIC LAYOUT PLANS (SERIES C-HZ) FOR PAVEMENT LOCATION LAYOUT.
6. REFER TO PAVEMENT ELEVATION PLANS (SERIES C-PE) FOR PANEL ELEVATIONS.
7. REFER TO TYPICAL SECTIONS FOR DETAILS OF TAXIWAY AND SHOULDER PAVEMENT.

KEYMAP

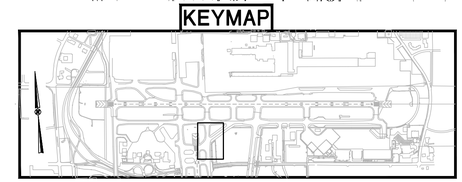

MEMPHIS - SHELBY COUNTY AIRPORT AUTHORITY
MEMPHIS INTERNATIONAL AIRPORT
2491 WINCHESTER RD. SUITE 113
MEMPHIS, TENNESSEE
38116-3856

PROGRAM MANAGER
PARSONS
Program Management Consultant
Parsons Transportation Group Inc.
Project Office:
4225 Airways Blvd.
Memphis TN, 38116
JOB NO.

Allen&Hoshall
engineers-architects-surveyors
1661 INTERNATIONAL DRIVE
SUITE 100
MEMPHIS, TENNESSEE 38120
PHONE: 901-820-0820
FAX: 901-683-1001
JOB NO. 72198-B

ENGINEER-SUBCONSULTANT
POWERS HILL DESIGN
CIVIL ENGINEERING. CIVIL RESPONSIBILITY.
80 Monroe Avenue
Suite 420
Memphis, TN 38103
Tel: 901.543.8000
JOB NO.

DRAWN BY: RNP
CHECKED BY: HP
APPROVED BY: TG

WILLIAM T. GIBSON REGISTERED ENGINEER AGRICULTURE No. 104251 STATE OF TENNESSEE
3/17/25

ISSUED FOR BID

NO.	DESCRIPTION	DATE	BY

REVISIONS

PROJECT:
TAXIWAY BRAVO RECONFIGURATION (HOT SPOT 1)

SHEET TITLE:
PAVEMENT JOINT LAYOUT PLAN TAXIWAY BRAVO STA. 0+17.89 TO STA. 9+24.90

MSCAA NO. 18-1413-02
DWG. FILE NAME C-JT-01.DWG
DATE 03/17/2025
DWG NO. C-JT-01
SCALE 1"=50'
SHEET NO. 37 of 73
FACILITY NO. NONE

Drawing name: \\Ahmem03\72198-b\18-1413-02\DRAWINGS\C-JT-01.dwg 22x34 May 28, 2025 10:47am by: nparris

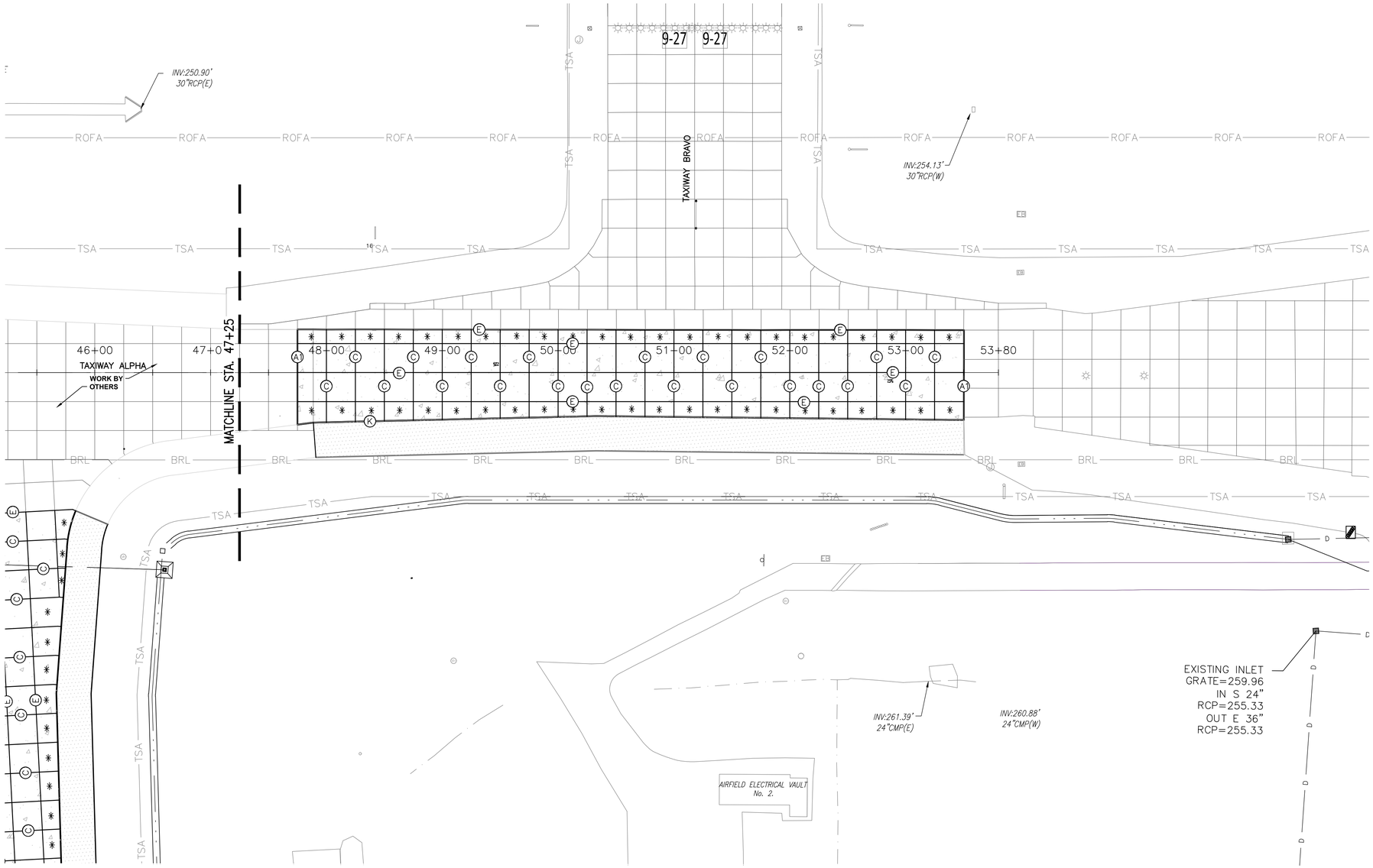

0' 25' 50' 100'

FULL SIZE SCALE: 1"=50'
HALF SIZE SCALE: 1"=100'

PROPOSED LEGEND

- PORTLAND CEMENT CONCRETE PAVEMENT (FULL STRENGTH) (P-501)
- ASPHALTIC CONCRETE PAVEMENT (SHOULDERS) (P-401)

PAVING JOINT DESIGNATION TABLE	
SYMBOL	TYPE
A	TYPE "A" THICKENED EDGE EXPANSION JOINT
C	TYPE "C" DOWELED CONTRACTION JOINT
E	TYPE "E" DOWELED CONSTRUCTION JOINT
K	TYPE "K" BUTT CONSTRUCTION JOINT
K1	TYPE "K" BUTT CONSTRUCTION JOINT
A1	TYPE "A1" THICKENED EDGE EXPANSION JOINT
*	REINFORCED PANEL

JOINT LAYOUT NOTES

1. FOR JOINT DETAILS, SEE SHEETS C-JT-02 AND C-JT-03.
2. UNLESS OTHERWISE NOTED, THE WIDTH AT THE END OF THE PROPOSED PCC TAPERS IS 2.00'.
3. JOINT TYPES ARE CONTINUOUS UNLESS OTHERWISE NOTED.
4. THE CONTRACTOR MAY PROPOSE AN ALTERNATE JOINT LAYOUT PLAN TO MATCH THE PAVING PLAN, FOR REVIEW BY THE PROGRAM MANAGER.
5. REFER TO GEOMETRIC LAYOUT PLANS (SERIES C-HZ) FOR PAVEMENT LOCATION LAYOUT.
6. REFER TO PAVEMENT ELEVATION PLANS (SERIES C-PE) FOR PANEL ELEVATIONS.
7. REFER TO TYPICAL SECTIONS FOR DETAILS OF TAXIWAY AND SHOULDER PAVEMENT.

KEYMAP

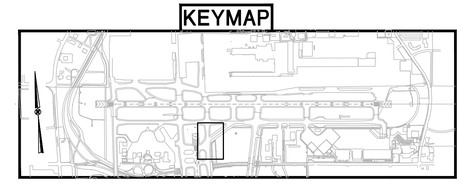

MEMPHIS - SHELBY COUNTY AIRPORT AUTHORITY
MEMPHIS INTERNATIONAL AIRPORT
2491 WINCHESTER RD. SUITE 113
MEMPHIS, TENNESSEE
38116-3856

PROGRAM MANAGER
PARSONS
Program Management Consultant
Parsons Transportation Group Inc.
Project Office:
4225 Airways Blvd.
Memphis TN, 38116
JOB NO.

Allen&Hoshall
engineers-architects-surveyors
1661 INTERNATIONAL DRIVE
SUITE 100
MEMPHIS, TENNESSEE 38120
PHONE: 901-820-0820
FAX: 901-683-1001
JOB NO. 72198-B

ENGINEER-SUBCONSULTANT
POWERS HILL DESIGN
CIVIL ENGINEERING. CIVIL RESPONSIBILITY.
80 Monroe Avenue
Suite 420
Memphis, TN 38103
Tel: 901.543.8000
JOB NO.

DRAWN BY: RNP
CHECKED BY: HP
APPROVED BY: TG

WILLIAM T. GIBSON REGISTERED ENGINEER AGRICULTURE No. 104251 STATE OF TENNESSEE
3/17/25

ISSUED FOR BID

NO.	DESCRIPTION	DATE	BY

REVISIONS

PROJECT:
TAXIWAY BRAVO RECONFIGURATION (HOT SPOT 1)

SHEET TITLE:
PAVEMENT JOINT LAYOUT PLAN TAXIWAY ALPHA STA. 47+25.00TO STA. 53+50.00

MSCAA NO. 18-1413-02
DWG. FILE NAME C-JT-02.DWG
DATE 03/17/2025
DWG NO. C-JT-02
SCALE 1"=50'
SHEET NO. 38 of 73
FACILITY NO. NONE

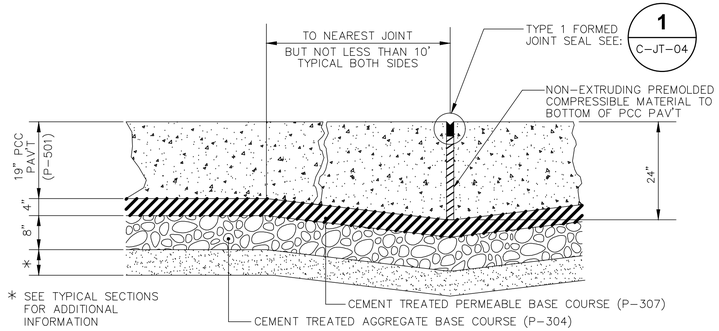

NOTE: UNDERDRAIN NOT SHOWN FOR PURPOSE OF CLARITY, FOR FURTHER INFORMATION SEE SHEET C-UD-05

A / C-JT-03 TYPE "A" THICKENED EDGE EXPANSION JOINT

N.T.S.

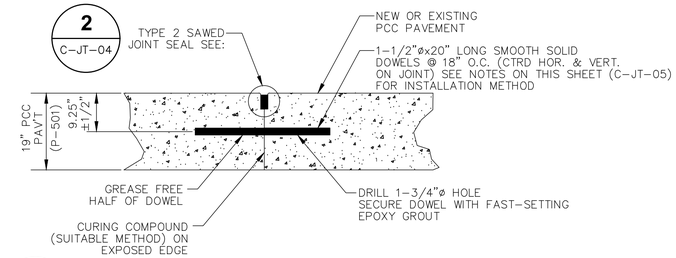

D / C-JT-03 TYPE "E" DOWELED CONSTRUCTION JOINT

N.T.S.

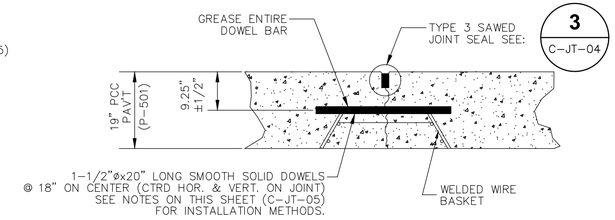

C / C-JT-03 TYPE "C" DOWELED CONTRACTION JOINT

N.T.S.

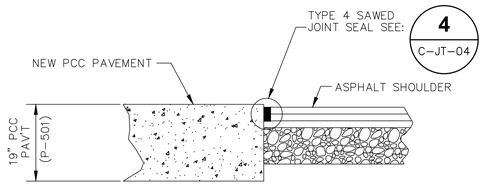

NOTE: UNDERDRAIN NOT SHOWN FOR PURPOSE OF CLARITY, FOR FURTHER INFORMATION SEE SHEET C-UD-05

K / C-JT-03 TYPE "K" BUTT CONSTRUCTION JOINT

N.T.S.

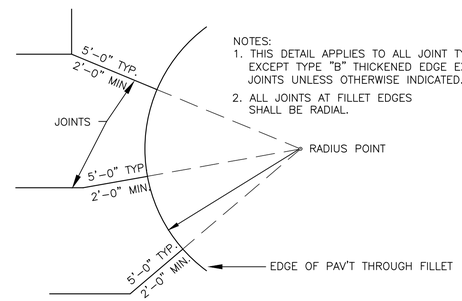

NOTES:
1. THIS DETAIL APPLIES TO ALL JOINT TYPES EXCEPT TYPE "B" THICKENED EDGE EXPANSION JOINTS UNLESS OTHERWISE INDICATED.
2. ALL JOINTS AT FILLET EDGES SHALL BE RADIAL.

1 / C-JT-03 TYPICAL JOINT LAYOUT AT FILLETS

N.T.S.

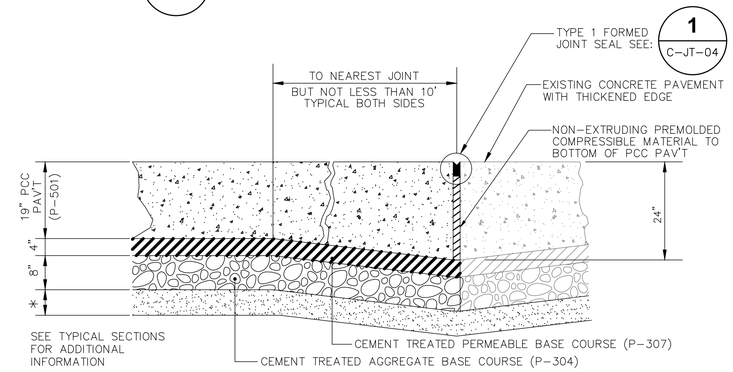

NOTE: UNDERDRAIN NOT SHOWN FOR PURPOSE OF CLARITY, FOR FURTHER INFORMATION SEE SHEET C-UD-05

A1 / C-JT-03 TYPE "A1" THICKENED EDGE EXPANSION JOINT

N.T.S.

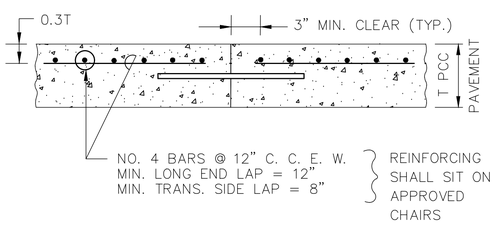

3 / C-JT-03 REINFORCED PANEL SECTIONS (INDICATED BY * ON JOINTING PLANS)

N.T.S.

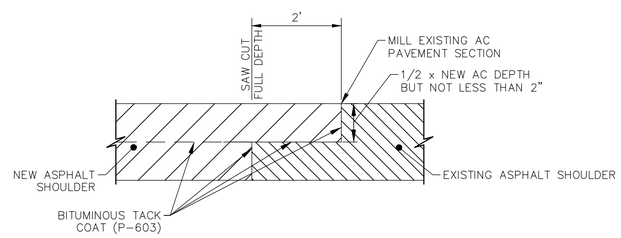

4 / C-JT-03 NEW SHOULDER TO EXISTING SHOULDER

N.T.S.

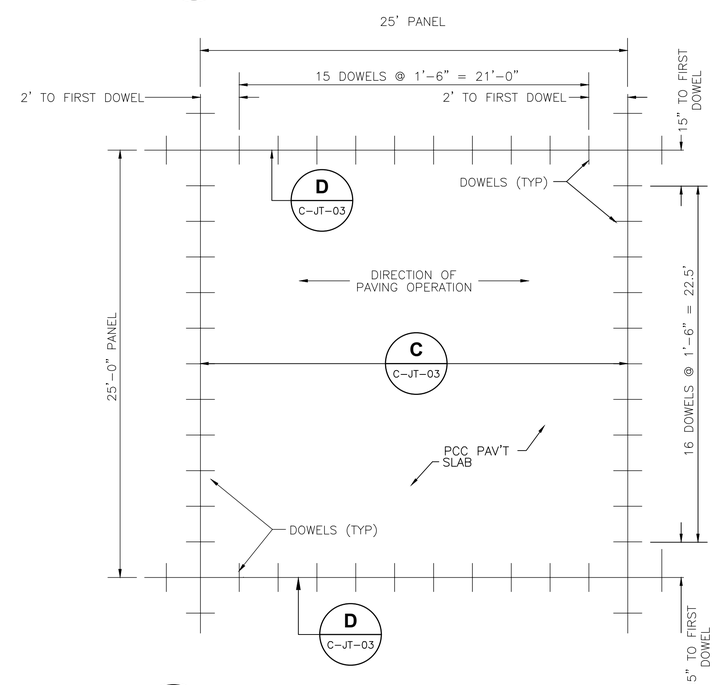

5 / C-JT-03 TYPICAL PANEL (25' x 25') DOWEL LAYOUT

N.T.S.

MEMPHIS - SHELBY COUNTY AIRPORT AUTHORITY

MEMPHIS INTERNATIONAL AIRPORT
2491 WINCHESTER RD. SUITE 113
MEMPHIS, TENNESSEE
38116-3856

PROGRAM MANAGER
PARSONS
Program Management Consultant
Parsons Transportation Group Inc.
Project Office:
4225 Airways Blvd.
Memphis TN, 38116
JOB NO.

Allen&Hoshall
engineers-architects-surveyors
1661 INTERNATIONAL DRIVE
SUITE 100
MEMPHIS, TENNESSEE 38120
PHONE: 901-820-0820
FAX: 901-683-1001
JOB NO. 72198-B

ENGINEER-SUBCONSULTANT
POWERS HILL DESIGN
CIVIL ENGINEERING. CIVIL RESPONSIBILITY.
80 Monroe Avenue
Suite 420
Memphis, TN 38103
Tel: 901.543.8000
JOB NO.

DRAWN BY: RNP
CHECKED BY: HP
APPROVED BY: TG

WILLIAM T. GIBSON
REGISTERED ENGINEER
AGRICULTURE
No. 104251
STATE OF TENNESSEE
3/13/25

ISSUED FOR BID

NO.	DESCRIPTION	DATE	BY

REVISIONS

PROJECT:
TAXIWAY BRAVO RECONFIGURATION (HOT SPOT 1)

SHEET TITLE:
PAVEMENT JOINTS DETAILS

MSCAA NO. 18-1413-02
DWG. FILE NAME C-JT-05.DWG
DATE 03/17/2025
DWG NO. C-JT-03
SCALE NTS
SHEET NO. 39 of 73
FACILITY NO. NONE

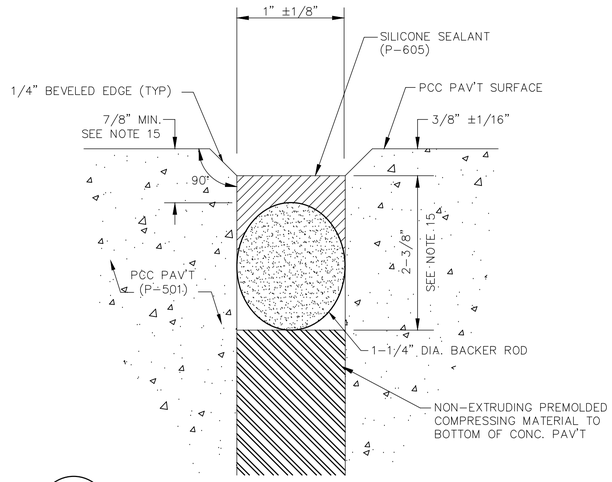

1 FORMED EXPANSION JOINT SEAL-TYPE 1

C-JT-04 N.T.S.

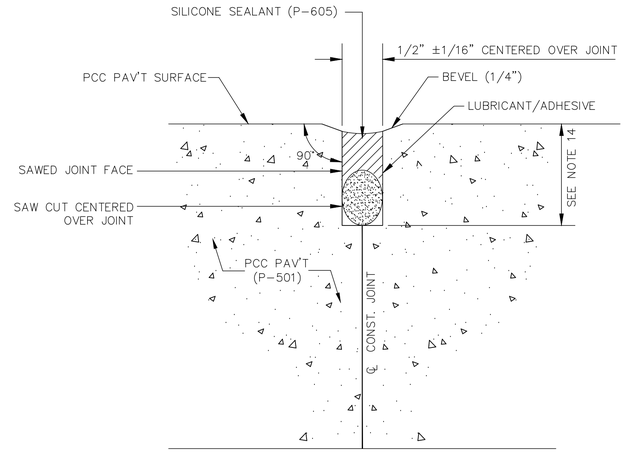

2 SAWED CONSTRUCTION JOINT SEAL-TYPE 2

C-JT-04 N.T.S.

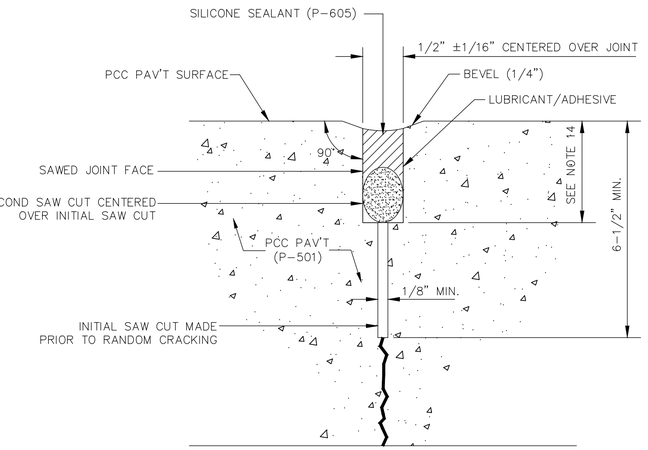

3 SAWED CONTRACTION JOINT SEAL-TYPE 3

C-JT-04 N.T.S.

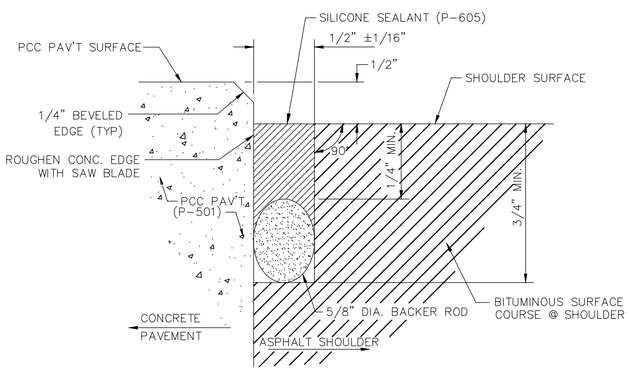

4 SAWED CONSTRUCTION JOINT SEAL-TYPE 4 AT SHOULDER

C-JT-04 N.T.S.

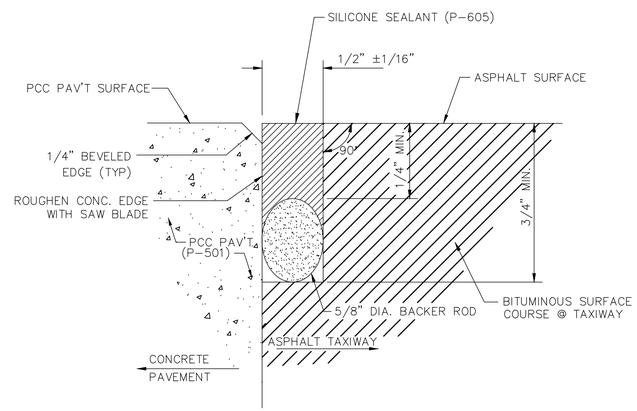

5 SAWED CONSTRUCTION JOINT SEAL-TYPE 4A AT SHOULDER

C-JT-04 N.T.S.

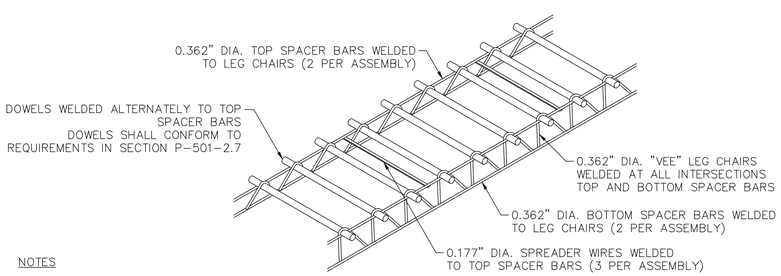

NOTES

1. BASKET SHALL BE FIRMLY ANCHORED TO GRADE.
2. ALL WIRE SIZES SHOWN ARE MINIMUM SIZE.
3. DOWELS SHALL BE HELD FIRMLY IN THE ASSEMBLY.

6 DOWEL BASKET ASSEMBLY

C-JT-04 N.T.S.

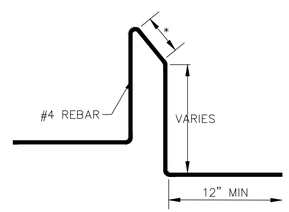

NOTES

1. CHAIR SHALL BE FIRMLY ANCHORED TO GRADE.
2. THE NUMBER OF CHAIRS USED SHALL BE SUFFICIENT TO FULLY SUPPORT REINFORCEMENT MAT AT THE PROPER HEIGHT DURING PLACEMENT OF CONCRETE.

* AS REQUIRED TO FULLY SUPPORT REINFORCEMENT MAT.

7 MAT SUPPORT CHAIR

C-JT-04 N.T.S.

JOINTING NOTES

1. DOWELS SHALL BE FULLY SHOP PAINTED WITH ONE COAT OF CORROSION INHIBITING PRIMER CONFORMING TO FEDERAL SPEC. TT-P-664D.
2. DOWELS SHALL BE SOLID SMOOTH STEEL BARS, 1-1/2"ø, 20" LONG AND SPACED AT 18" ON CENTER AND SHALL MAINTAIN THE PRESCRIBED DISTANCES FROM TRANSVERSE JOINTS AND FROM LONGITUDINAL JOINTS BASED ON DETAIL 5 ON C-JT-05 DEPENDING ON PCC PANEL SIZE.
3. PRIOR TO INSTALLATION IN CONTRACTION JOINTS DOWELS SHALL BE LIGHTLY GREASED WITH A THIN COAT OF HIGH MELTING POINT GREASE OR APPROVED EQUAL AS INDICATED. IN CONSTRUCTION JOINT, ONLY THE FREE END SHALL BE GREASED, AND ONLY AFTER INSERTION AND GROUTING INTO PLACE.
4. ALL CONSTRUCTION JOINT DOWELS SHALL BE GANG-DRILLED AND EPOXY GROUTED. INSERTION EQUIPMENT WILL NOT BE ALLOWED.
5. DRILLING METHOD FOR DOWELS SHALL BE CAPABLE OF MAINTAINING DRILL HOLES PARALLEL TO THE CONCRETE SURFACE AND NORMAL TO THE JOINT LINES. DRILL HOLES SHALL BE ACCURATELY LAID OUT SO THAT THE MAXIMUM HORIZONTAL AND VERTICAL DEVIATION DOES NOT EXCEED 1".
6. AFTER DRILLING IS COMPLETE AND PRIOR TO THE INSTALLATION OF THE DOWELS, THE HOLES SHALL BE THOROUGHLY CLEANED TO REMOVE DRILLING DUST, CONCRETE CHIPS AND ANY OTHER MATERIAL DETRIMENTAL TO DEVELOPING BOND.
7. EPOXY GROUT SHALL BE INJECTED UNIFORMLY TO THE ENTIRE CIRCUMFERENCE OF THE DOWEL HOLE SURFACE (CONTRACTOR SHALL NOT DIP AND INSERT DOWEL) AND SUFFICIENT MATERIAL PLACED IN THE HOLE SO THAT A SLIGHT AMOUNT WILL BE FORCED OUT FROM AROUND THE ENTIRE CIRCUMFERENCE WHEN THE DOWEL IS INSERTED AND TAPPED TO THE CORRECT POSITION. SMALL WEDGES MAY BE USED TO SUPPORT THE DOWEL IN CORRECT ALIGNMENT UNTIL THE MATERIAL HARDENS. THE TOLERANCE FOR DOWEL ALIGNMENT IN EITHER THE HORIZONTAL OR VERTICAL PLANE IS 1/4" PER FOOT OF DOWEL BAR.
8. ALL TRANSVERSE CONTRACTION JOINT DOWELS SHALL BE INSTALLED USING A PROGRAM MANAGER-APPROVED WELDED BASKET ASSEMBLY ANCHORED TO THE CEMENT TREATED PERMEABLE BASE COURSE (P-307) WITH A MINIMUM OF 4 GALVANIZED STRAPS AND NAILS PER ASSEMBLY. POSITION ANCHOR STRAPS ON ALTERNATING SIDES OF THE BASKET ASSEMBLY.
9. A TRANSVERSE CONSTRUCTION JOINT SHALL BE INSTALLED AT A PLANNED JOINT WHEN PAVING OPERATIONS ARE INTERRUPTED FOR MORE THAN 30 MINUTES. IF THE INTERRUPTION OCCURS BETWEEN PLANNED JOINTS, THE FRESH CONCRETE SHALL BE REMOVED BACK TO THE PREVIOUSLY INSTALLED JOINT. UNLESS OTHERWISE APPROVED, NO JOINTS WILL BE ALLOWED BETWEEN THE JOINTS SHOWN ON THE JOINTING PLAN.
10. EDGES OF CONCRETE SLABS SHALL BE COVERED WITH AN APPROVED CURING MATERIAL AT THE SAME TIME AS SURFACE IS CURED. AT FORMED LOCATIONS, SLAB SIDES SHALL BE CURED WHEN FORMS ARE REMOVED.
11. CONCRETE IN REINFORCED PANELS SHALL BE PLACED IN ONE COURSE. ALL WWF SHALL BE INSTALLED USING PROGRAM MANAGER-APPROVED HI-CHAIRS ANCHORED TO THE CEMENT TREATED PERMEABLE BASE (P-307) 3' ON CENTER MAXIMUM. THE WWF SHALL RETAIN ITS SPECIFIED POSITION DURING CONCRETE PLACEMENT. WWF VIBRATED DOWN FROM THE TOP AFTER CONCRETE IS PLACED WILL NOT BE ALLOWED.
12. ALL WORK AND MATERIALS REQUIRED FOR JOINTS IS INCIDENTAL TO P-501 PCC PAVEMENT PAY ITEMS.
13. COST OF MODIFYING UNDERLYING PAVEMENT COURSES TO ACCOMMODATE THE CONCRETE PAVEMENT THICKENED EDGE TO BE INCLUDED IN THE COST OF OTHER ITEMS. NO SEPARATE PAYMENT WILL BE MADE FOR SAID MODIFICATIONS. THE P-307 AND P-304 SHALL BE CONSTRUCTED FULL THICKNESS UNDER THE THICKENED EDGE.
14. SEALANT RESERVOIR SHAPE FACTOR, W/D, SHALL BE PER MANUFACTURER'S RECOMMENDATIONS.
15. ALL JOINT SEALANT RESERVOIRS SHOWN ON THIS SHEET SHALL BE VERIFIED BY THE SEALANT MANUFACTURER PRIOR TO CONSTRUCTION. REFER TO SECTION P-605 OF THE SPECIFICATIONS FOR FURTHER INFORMATION.

MEMPHIS - SHELBY COUNTY AIRPORT AUTHORITY

MEMPHIS INTERNATIONAL AIRPORT
2491 WINCHESTER RD. SUITE 113
MEMPHIS, TENNESSEE
38116-3856

PROGRAM MANAGER
PARSONS
Program Management Consultant
Parsons Transportation Group Inc.
Project Office:
4225 Airways Blvd.
Memphis TN, 38116
JOB NO.

Allen&Hoshall
engineers-architects-surveyors
1661 INTERNATIONAL DRIVE
SUITE 100
MEMPHIS, TENNESSEE 38120
PHONE: 901-820-0820
FAX: 901-683-1001
JOB NO. 72198-B

ENGINEER-SUBCONSULTANT
POWERS HILL DESIGN
CIVIL ENGINEERING. CIVIL RESPONSIBILITY.
80 Monroe Avenue
Suite 420
Memphis, TN 38103
Tel: 901.543.8000
JOB NO.

DRAWN BY: RNP
CHECKED BY: HP
APPROVED BY: TG

WILLIAM T. GIBSON REGISTERED ENGINEER AGRICULTURE No. 104251 STATE OF TENNESSEE 3/17/25

ISSUED FOR BID

NO.	DESCRIPTION	DATE	BY

REVISIONS

PROJECT:

TAXIWAY BRAVO RECONFIGURATION (HOT SPOT 1)

SHEET TITLE:

PAVEMENT JOINTS DETAILS

MSCAA NO. 18-1413-02
DWG. FILE NAME C-JT-04.DWG
DATE 03/17/2025
DWG NO. C-JT-04
SCALE NTS
SHEET NO. 40 of 73
FACILITY NO. NONE

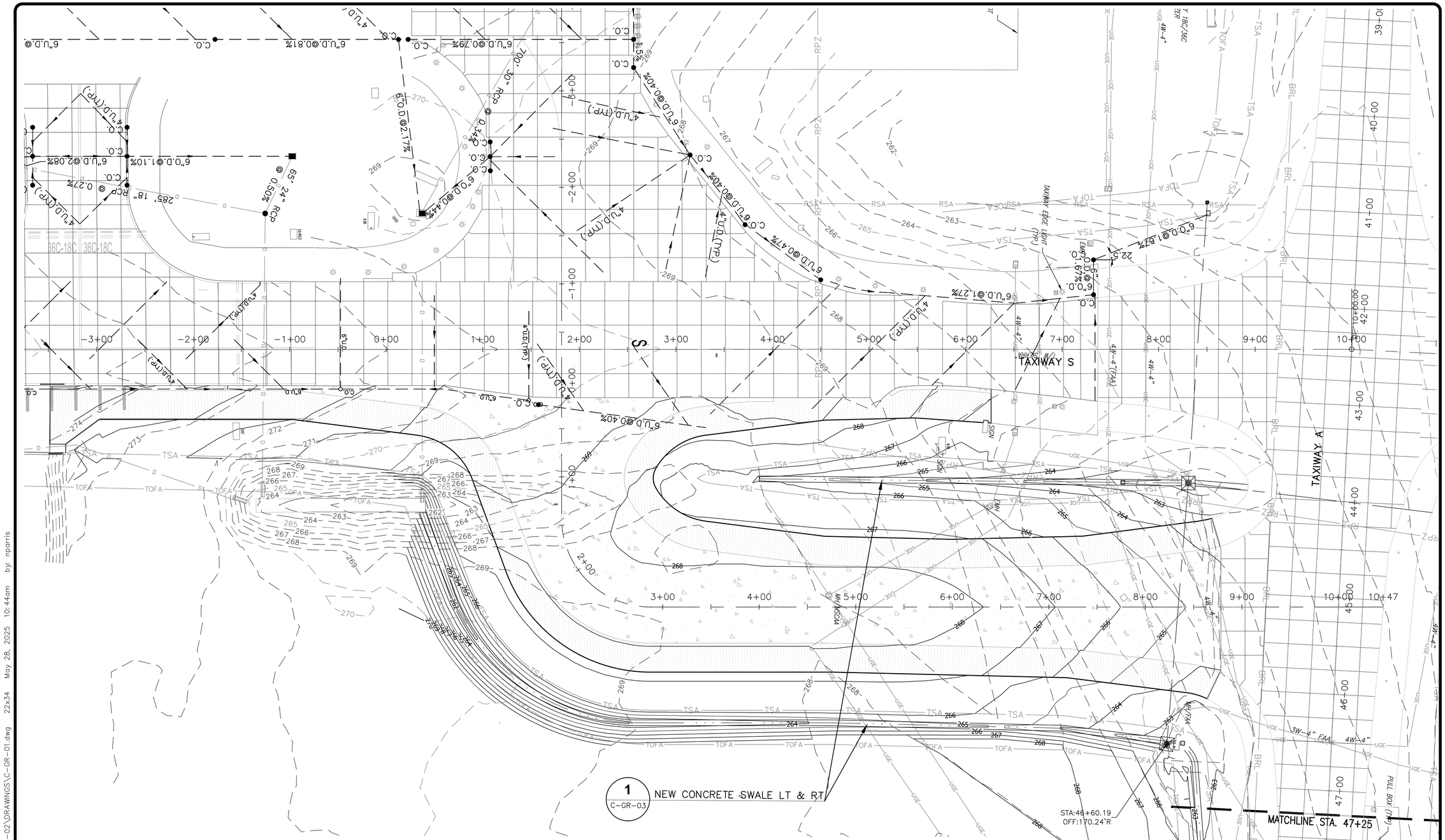

PROPOSED LEGEND

- PROPOSED INLET
- PROPOSED DRAINAGE PIPE
- PROPOSED HEADWALL/ FLARED END SECTION
- PROPOSED CONCRETE SWALE
- PROPOSED DRAIN MANHOLE
- 251 PROPOSED CONTOURS
- 288 EXISTING CONTOURS
- EXISTING PIPE
- A-2 PROPOSED DRAINAGE STRUCT. LABEL

NOTES

1. SEE SHEET G-ID-03 FOR DEFINITION OF SYMBOLS AND ABBREVIATIONS.
2. SEE GEOMETRIC LAYOUT SHEETS FOR PROPOSED PAVEMENT LOCATION AND DIMENSIONAL INFORMATION.
3. EXISTING UNDERGROUND FACILITIES SHOWN ARE LOCATED FROM AVAILABLE SURFACE INFORMATION, MAPS, PLANS AND OTHER RECORDS. LOCATIONS AND ELEVATIONS SHOWN ARE APPROXIMATE AND ARE BASED ON THE INFORMATION AVAILABLE, CONTRACTOR IS TOTALLY RESPONSIBLE FOR LOCATING AND MARKING ALL UNDERGROUND FACILITIES PRIOR TO CONSTRUCTION AND PROTECTING THOSE FACILITIES DURING CONSTRUCTION.
4. SEE ELECTRICAL SHEETS FOR LOCATION OF ADDITIONAL ELECTRICAL FACILITIES.
5. CONTRACTOR SHALL FIELD VERIFY EXISTING UTILITY LOCATIONS, DEPTH, AND CONDITION (DEB, CONDUIT OR DUCT) AND REPORT INFORMATION TO CONSTRUCTION MANAGER FOR ASSESSMENT.

0' 25' 50' 100'
FULL SIZE SCALE: 1"=50'
HALF SIZE SCALE: 1"=100'

KEYMAP

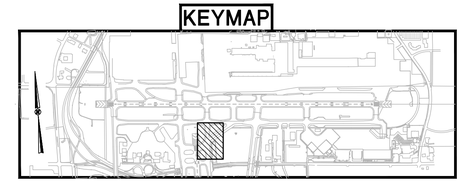

MEMPHIS - SHELBY COUNTY AIRPORT AUTHORITY
MEMPHIS INTERNATIONAL AIRPORT
2491 WINCHESTER RD. SUITE 113
MEMPHIS, TENNESSEE
38116-3856

PROGRAM MANAGER
PARSONS
Program Management Consultant
Parsons Transportation Group Inc.
Project Office:
4225 Airways Blvd.
Memphis TN, 38116
JOB NO.

Allen&Hoshall
engineers-architects-surveyors
1661 INTERNATIONAL DRIVE
SUITE 100
MEMPHIS, TENNESSEE 38120
PHONE: 901-820-0820
FAX: 901-683-1001
JOB NO. 72198-B

ENGINEER-SUBCONSULTANT
POWERS HILL DESIGN
CIVIL ENGINEERING. CIVIL RESPONSIBILITY.
80 Monroe Avenue
Suite 420
Memphis, TN 38103
Tel: 901.543.8000
JOB NO.

DRAWN BY: RNP
CHECKED BY: HP
APPROVED BY: TG

WILLIAM T. GIBSON
REGISTERED ENGINEER
AGRICULTURE
No. 104251
STATE OF TENNESSEE
3/17/25

ISSUED FOR BID

NO.	DESCRIPTION	DATE	BY

REVISIONS

PROJECT:

TAXIWAY BRAVO RECONFIGURATION (HOT SPOT 1)

SHEET TITLE:

GRADING AND DRAINAGE PLAN TAXIWAY BRAVO STA. 0+17.89 TO STA. 9+24.90

MSCAA NO. 18-1413-02
DWG. FILE NAME C-GR-01.DWG
DATE 03/17/2025
DWG NO. C-GR-01
SCALE 1"=50'
SHEET NO. 41 of 73
FACILITY NO. NONE

Drawing name: \\Ahmem03\72198-b\18-1413-02\DRAWINGS\C-GR-01.dwg 22x34 May 28, 2025 10:44am by: nparris

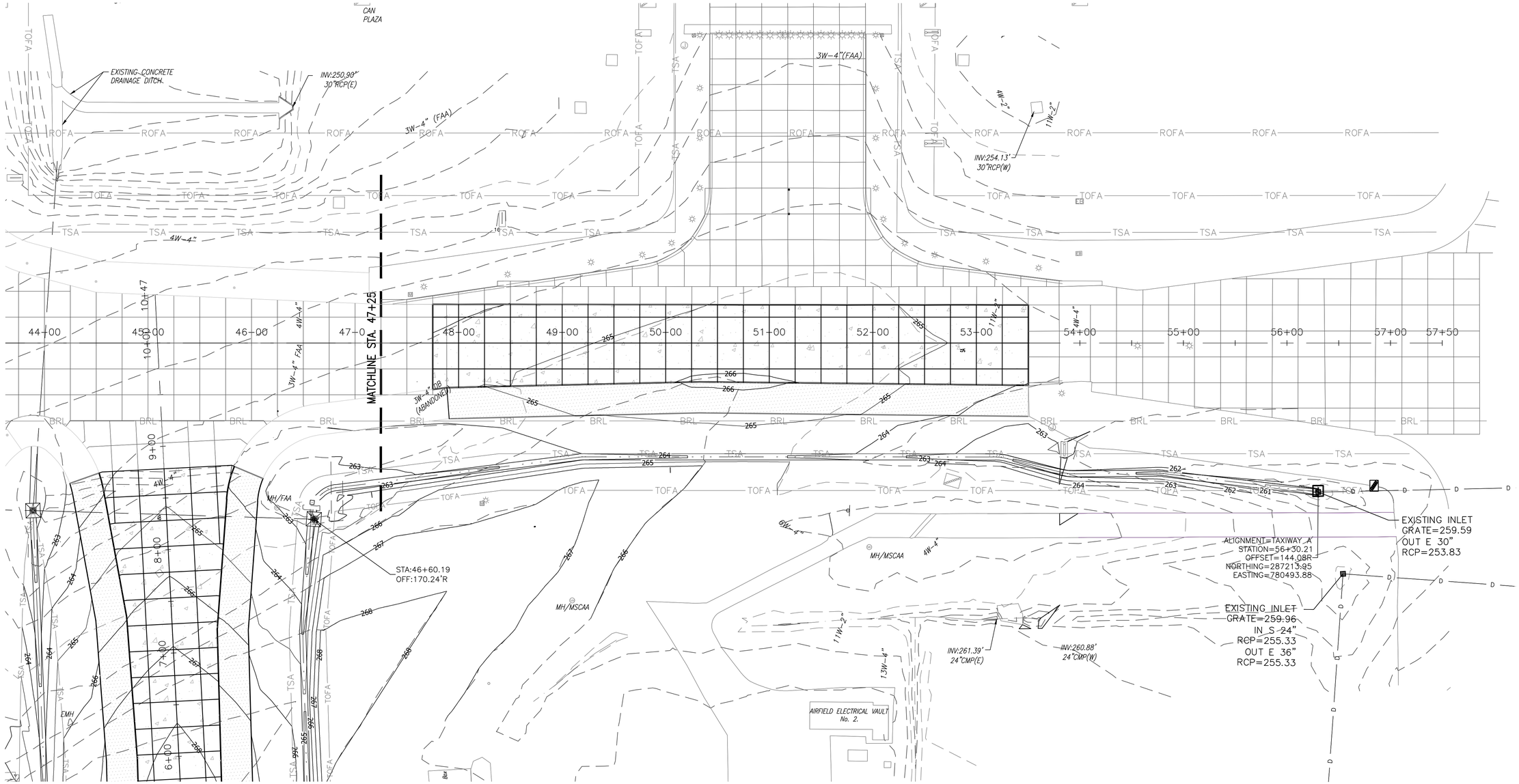

PROPOSED LEGEND

- PROPOSED INLET
- PROPOSED DRAINAGE PIPE
- PROPOSED HEADWALL/ FLARED END SECTION
- PROPOSED CONCRETE SWALE
- (D) PROPOSED DRAIN MANHOLE
- (251) PROPOSED CONTOURS
- 288 EXISTING CONTOURS
- EXISTING PIPE
- (A-2) PROPOSED DRAINAGE STRUCT. LABEL

NOTES

1. SEE SHEET G-ID-03 FOR DEFINITION OF SYMBOLS AND ABBREVIATIONS.
2. SEE GEOMETRIC LAYOUT SHEETS FOR PROPOSED PAVEMENT LOCATION AND DIMENSIONAL INFORMATION.
3. EXISTING UNDERGROUND FACILITIES SHOWN ARE LOCATED FROM AVAILABLE SURFACE INFORMATION, MAPS, PLANS AND OTHER RECORDS. LOCATIONS AND ELEVATIONS SHOWN ARE APPROXIMATE AND ARE BASED ON THE INFORMATION AVAILABLE, CONTRACTOR IS TOTALLY RESPONSIBLE FOR LOCATING AND MARKING ALL UNDERGROUND FACILITIES PRIOR TO CONSTRUCTION AND PROTECTING THOSE FACILITIES DURING CONSTRUCTION.
4. SEE ELECTRICAL SHEETS FOR LOCATION OF ADDITIONAL ELECTRICAL FACILITIES.
5. CONTRACTOR SHALL FIELD VERIFY EXISTING UTILITY LOCATIONS, DEPTH, AND CONDITION (DEB, CONDUIT OR DUCT) AND REPORT INFORMATION TO CONSTRUCTION MANAGER FOR ASSESSMENT.

0' 25' 50' 100'
FULL SIZE SCALE: 1"=50'
HALF SIZE SCALE: 1"=100'

KEYMAP

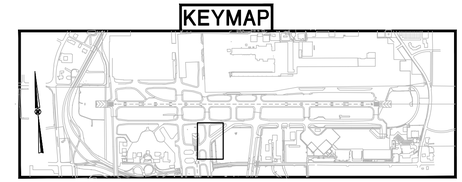

MEMPHIS - SHELBY COUNTY AIRPORT AUTHORITY
MEMPHIS INTERNATIONAL AIRPORT
2491 WINCHESTER RD. SUITE 113
MEMPHIS, TENNESSEE
38116-3856

PROGRAM MANAGER
PARSONS
Program Management Consultant
Parsons Transportation Group Inc.
Project Office:
4225 Airways Blvd.
Memphis TN, 38116
JOB NO.

Allen&Hoshall
engineers-architects-surveyors
1661 INTERNATIONAL DRIVE
SUITE 100
MEMPHIS, TENNESSEE 38120
PHONE: 901-820-0820
FAX: 901-683-1001
JOB NO. 72198-B

ENGINEER-SUBCONSULTANT
POWERS HILL DESIGN
CIVIL ENGINEERING. CIVIL RESPONSIBILITY.
80 Monroe Avenue
Suite 420
Memphis, TN 38103
Tel: 901.543.8000
JOB NO.

DRAWN BY: RNP
CHECKED BY: HP
APPROVED BY: TG

WILLIAM T. GIBSON REGISTERED ENGINEER AGRICULTURE No. 104251 STATE OF TENNESSEE
3/17/25

ISSUED FOR BID

NO.	DESCRIPTION	DATE	BY

REVISIONS

PROJECT:
TAXIWAY BRAVO RECONFIGURATION (HOT SPOT 1)

SHEET TITLE:
GRADING AND DRAINAGE PLAN TAXIWAY ALPHA STA. 47+25.00 TO STA. 53+50.00

MSCAA NO. 18-1413-02
DWG. FILE NAME C-GR-02.DWG
DATE 03/17/2025
DWG NO. C-GR-02
SCALE 1"=50'
SHEET NO. 42 of 73
FACILITY NO. NONE

Drawing name: \\Ahmem03\72198-b\18-1413-02\DRAWINGS\C-GR-02.dwg 22x34 May 28, 2025 10:45am by: nparris

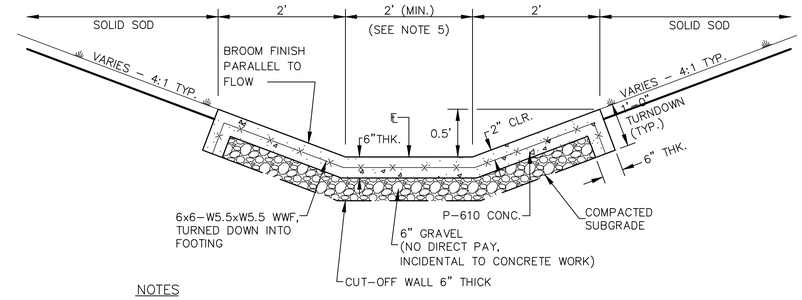

NOTES

1. CONSTRUCT 1 1/2" DEEP DUMMY (PRESSED OR FORMED) CONTRACTION JOINTS @ 6' O.C.
2. CONSTRUCT FULL DEPTH EXPANSION JOINT @ 30' O.C.
3. WWF SHALL CONTINUE ACROSS DUMMY JOINTS BUT SHALL BE DISCONTINUED ACROSS EXPANSION JOINTS.
4. CONSTRUCT A TURNDOWN AS DETAILED BELOW AT ALL PAVED DITCH FREE ENDS.
5. TRANSITION BOTTOM WIDTH FROM 2' MIN. TO MATCH HEADWALL WIDTH. TRANSITION LENGTH SHALL BE 10'.
6. ITEM TO BE PAID FOR AS D–754–5.1.

1 / C–GR–03 **CONCRETE LINED SWALE**

N.T.S.

MEMPHIS - SHELBY COUNTY AIRPORT AUTHORITY

MEMPHIS INTERNATIONAL AIRPORT
2491 WINCHESTER RD. SUITE 113
MEMPHIS, TENNESSEE
38116–3856

PROGRAM MANAGER
PARSONS
Program Management Consultant
Parsons Transportation Group Inc.
Project Office:
4225 Airways Blvd.
Memphis TN, 38116
JOB NO.

Allen&Hoshall
engineers-architects-surveyors
1661 INTERNATIONAL DRIVE
SUITE 100
MEMPHIS, TENNESSEE 38120
PHONE: 901–820–0820
FAX: 901–683–1001
JOB NO. 72198-B

ENGINEER–SUBCONSULTANT
POWERS HILL DESIGN
CIVIL ENGINEERING. CIVIL RESPONSIBILITY.
80 Monroe Avenue
Suite 420
Memphis, TN 38103
Tel: 901.543.8000
JOB NO.

DRAWN BY: RNP
CHECKED BY: HP
APPROVED BY: TG

WILLIAM T. GIBSON REGISTERED ENGINEER AGRICULTURE No. 104251 STATE OF TENNESSEE
3/13/25

ISSUED FOR BID

NO.	DESCRIPTION	DATE	BY

REVISIONS

PROJECT:
TAXIWAY BRAVO RECONFIGURATION (HOT SPOT 1)

SHEET TITLE:
DRAINAGE DETAILS

MSCAA NO. 18-1413-02
DWG. FILE NAME C-GR-03.DWG
DATE 03/17/2025
DWG NO. C-GR-03
SCALE N.T.S.
SHEET NO. 43 of 73
FACILITY NO. NONE

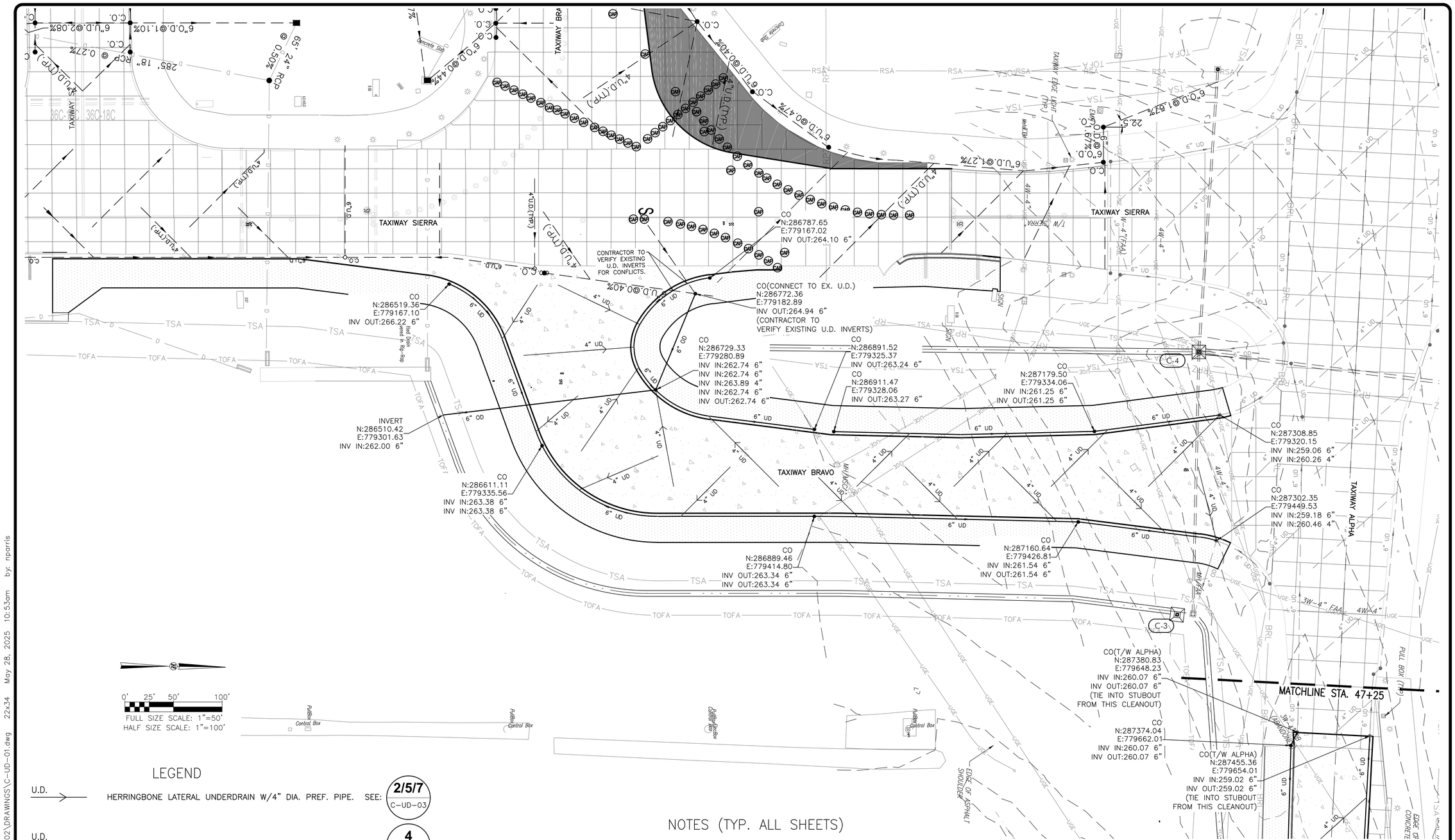

LEGEND

U.D.	HERRINGBONE LATERAL UNDERDRAIN W/4" DIA. PREF. PIPE. SEE:	2/5/7 C-UD-03
U.D.	LONGITUDINAL UNDERDRAIN WITH 6" DIA. PERF. PIPE. SEE:	4 C-UD-03
O.D.	OUTFALL 6" DIA. PIPE SEE:	6 C-UD-03
	EXIST. DRAIN INLET	
	PROP. DRAIN INLET	
	PROP. DRAIN MANHOLE	
	PROP. STORM DRAIN ENDWALL	
•CO	PROP. CLEAN OUT. SEE:	1-6 C-UD-04

NOTES (TYP. ALL SHEETS)

1. MAINTAIN GRADE CONTROL TO ENSURE POSITIVE GRAVITY DRAINAGE AT ALL LOCATIONS
2. PUMP OR BALE OUT ACCUMULATED WATER IN UNDERDRAIN TRENCHES. NO STANDING WATER WILL BE ALLOWED IN TRENCHES; DURING CONSTRUCTION, ENSURE POSITIVE DRAINAGE OUTFALLS ARE AVAILABLE FROM ALL TRENCHES
3. VERIFY ELEVATIONS OF ALL EXISTING AND PROPOSED UTILITY CROSSINGS PRIOR TO CONSTRUCTION. RESOLVE CONFLICTS PRIOR TO CONSTRUCTION OF EACH OUTLET SYSTEM
4. DURING AND AFTER UNDERDRAIN PIPE AND BACKFILL INSTALLATION, PROTECT THE UNDERDRAIN TRENCH SUCH THAT NO FINES OR EARTH MATERIAL ENTER SAME PRIOR TO OVERLYING AGGREGATE BASE COURSE CONSTRUCTION.
5. NO TACK COAT, PRIME COAT OR BITUMINOUS CURE COAT FROM PAVING OPERATIONS WILL BE ALLOWED ON TOP OF THE TRENCH. PROTECT SAME DURING PAVING CONSTRUCTION.
6. ALL UNDERDRAIN WORK SHALL BE COMPLETED PRIOR TO P-304-CEMENT TREATED AGGREGATE BASE CONSTRUCTION.
7. PRIOR TO CONSTRUCTION, STAKE OUT THE UNDERDRAIN SYSTEM IN THE FIELD FOR ENGINEER APPROVAL.
8. ALL OUTFALL UNDERDRAIN PIPES SHALL BE CONSTRUCTED PRIOR TO THE ADJACENT UNDERDRAIN PIPE NETWORK BENEATH PAVEMENTS.

KEYMAP

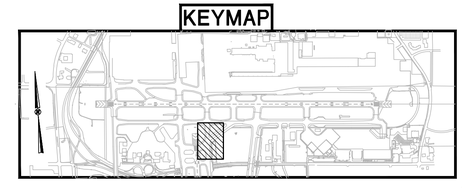

MEMPHIS - SHELBY COUNTY AIRPORT AUTHORITY
MEMPHIS INTERNATIONAL AIRPORT
2491 WINCHESTER RD. SUITE 113
MEMPHIS, TENNESSEE
38116-3856

PROGRAM MANAGER
PARSONS
Program Management Consultant
Parsons Transportation Group Inc.
Project Office:
4225 Airways Blvd.
Memphis TN, 38116
JOB NO.

Allen&Hoshall
engineers-architects-surveyors
1661 INTERNATIONAL DRIVE
SUITE 100
MEMPHIS, TENNESSEE 38120
PHONE: 901-820-0820
FAX: 901-683-1001
JOB NO. 72198-B

ENGINEER-SUBCONSULTANT
POWERS HILL DESIGN
CIVIL ENGINEERING. CIVIL RESPONSIBILITY.
80 Monroe Avenue
Suite 420
Memphis, TN 38103
Tel: 901.543.8000
JOB NO.

DRAWN BY: GD
CHECKED BY: SH
APPROVED BY: SH

STEVEN HILL
REGISTERED ENGINEER
AGENT
No. 115212
STATE OF TENNESSEE
03/17/25

ISSUED FOR BID

NO.	DESCRIPTION	DATE	BY

REVISIONS

PROJECT:
TAXIWAY BRAVO RECONFIGURATION (HOT SPOT 1)

SHEET TITLE:
UNDERDRAIN LAYOUT TAXIWAY BRAVO STA. 0+17.89 TO STA. 9+24.90

MSCAA NO. 18-1413-02
DWG. FILE NAME C-UD-01.DWG
DATE 03/17/2025
DWG NO. C-UD-01
SCALE 1"=50'
SHEET NO. 44 of 73
FACILITY NO. NONE

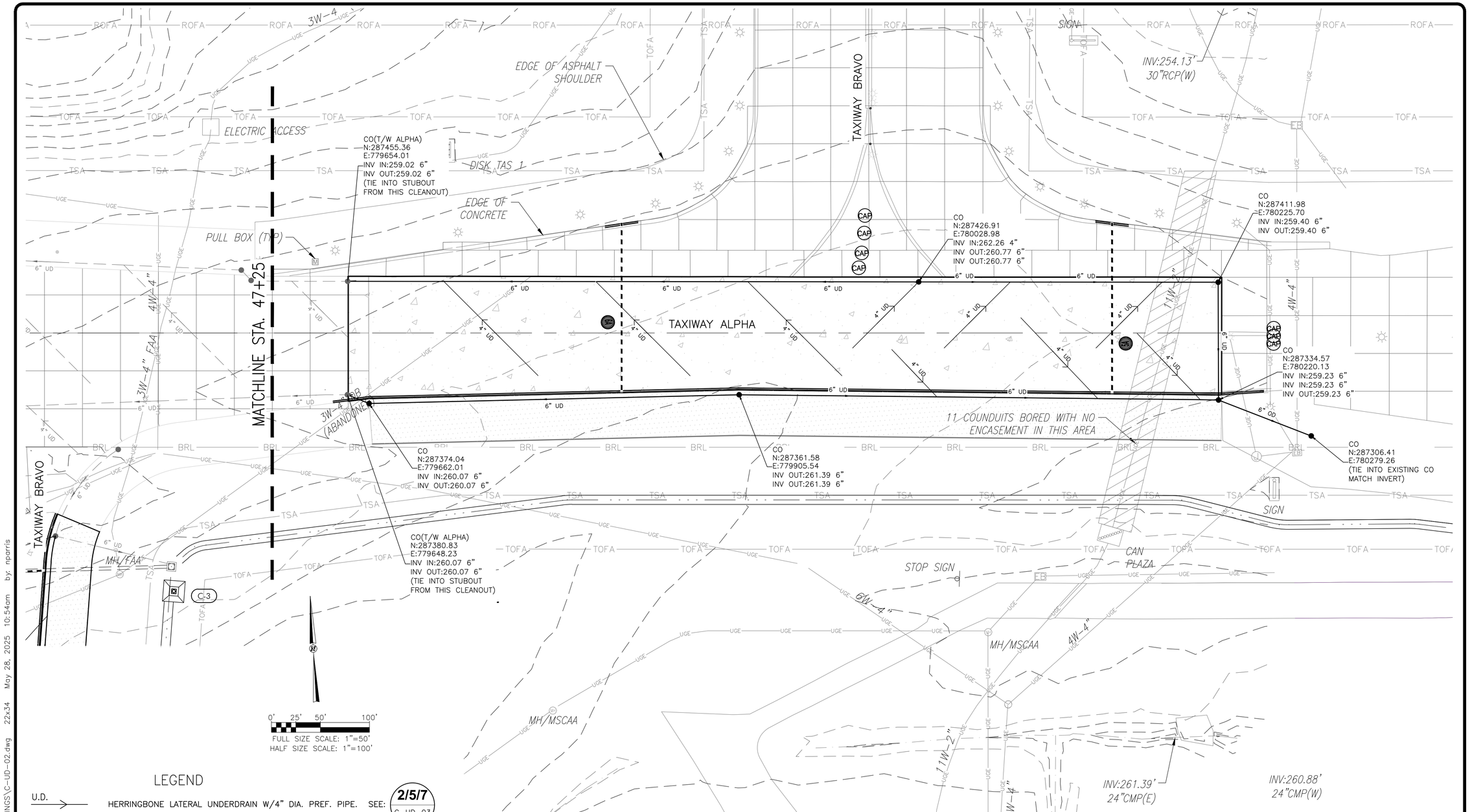

LEGEND

U.D.	HERRINGBONE LATERAL UNDERDRAIN W/4" DIA. PREF. PIPE. SEE:	2/5/7 C-UD-03
U.D.	LONGITUDINAL UNDERDRAIN WITH 6" DIA. PERF. PIPE. SEE:	4 C-UD-03
O.D.	OUTFALL 6" DIA. PIPE SEE:	6 C-UD-03
	EXIST. DRAIN INLET	
	PROP. DRAIN INLET	
	PROP. DRAIN MANHOLE	
	PROP. STORM DRAIN ENDWALL	
•CO	PROP. CLEAN OUT. SEE:	1-6 C-UD-04

NOTES (TYP. ALL SHEETS)

1. MAINTAIN GRADE CONTROL TO ENSURE POSITIVE GRAVITY DRAINAGE AT ALL LOCATIONS
2. PUMP OR BALE OUT ACCUMULATED WATER IN UNDERDRAIN TRENCHES. NO STANDING WATER WILL BE ALLOWED IN TRENCHES; DURING CONSTRUCTION, ENSURE POSITIVE DRAINAGE OUTFALLS ARE AVAILABLE FROM ALL TRENCHES
3. VERIFY ELEVATIONS OF ALL EXISTING AND PROPOSED UTILITY CROSSINGS PRIOR TO CONSTRUCTION. RESOLVE CONFLICTS PRIOR TO CONSTRUCTION OF EACH OUTLET SYSTEM
4. DURING AND AFTER UNDERDRAIN PIPE AND BACKFILL INSTALLATION, PROTECT THE UNDERDRAIN TRENCH SUCH THAT NO FINES OR EARTH MATERIAL ENTER SAME PRIOR TO OVERLYING AGGREGATE BASE COURSE CONSTRUCTION.
5. NO TACK COAT, PRIME COAT OR BITUMINOUS CURE COAT FROM PAVING OPERATIONS WILL BE ALLOWED ON TOP OF THE TRENCH. PROTECT SAME DURING PAVING CONSTRUCTION.
6. ALL UNDERDRAIN WORK SHALL BE COMPLETED PRIOR TO P-304-CEMENT TREATED AGGREGATE BASE CONSTRUCTION.
7. PRIOR TO CONSTRUCTION, STAKE OUT THE UNDERDRAIN SYSTEM IN THE FIELD FOR ENGINEER APPROVAL.
8. ALL OUTFALL UNDERDRAIN PIPES SHALL BE CONSTRUCTED PRIOR TO THE ADJACENT UNDERDRAIN PIPE NETWORK BENEATH PAVEMENTS.

KEYMAP

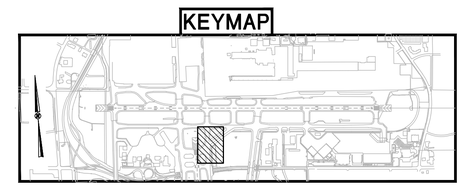

MEMPHIS - SHELBY COUNTY AIRPORT AUTHORITY
MEMPHIS INTERNATIONAL AIRPORT
2491 WINCHESTER RD. SUITE 113
MEMPHIS, TENNESSEE
38116-3856

PROGRAM MANAGER
PARSONS
Program Management Consultant
Parsons Transportation Group Inc.
Project Office:
4225 Airways Blvd.
Memphis TN, 38116
JOB NO.

Allen&Hoshall
engineers-architects-surveyors
1661 INTERNATIONAL DRIVE
SUITE 100
MEMPHIS, TENNESSEE 38120
PHONE: 901-820-0820
FAX: 901-683-1001
JOB NO. 72198-B

ENGINEER-SUBCONSULTANT
POWERS HILL DESIGN
CIVIL ENGINEERING. CIVIL RESPONSIBILITY.
80 Monroe Avenue
Suite 420
Memphis, TN 38103
Tel: 901.543.8000
JOB NO.

DRAWN BY: GD
CHECKED BY: SH
APPROVED BY: SH

STEVEN HILL
REGISTERED ENGINEER
AGREEMENT
No. 115212
STATE OF TENNESSEE
03/17/25

ISSUED FOR BID

NO.	DESCRIPTION	DATE	BY

REVISIONS

PROJECT:
TAXIWAY BRAVO RECONFIGURATION (HOT SPOT 1)

SHEET TITLE:
UNDERDRAIN LAYOUT TAXIWAY ALPHA STA. 47+25.00 TO STA. 53+50.00

MSCAA NO. 18-1413-02
DWG. FILE NAME C-UD-02.DWG
DATE 03/17/2025
DWG NO. C-UD-02
SCALE 1"=50'
SHEET NO. 45 of 73
FACILITY NO. NONE

Drawing name: \\Ahmem03\72198-b\18-1413-02\DRAWINGS\C-UD-02.dwg 22x34 May 28, 2025 10:54am by: nparris

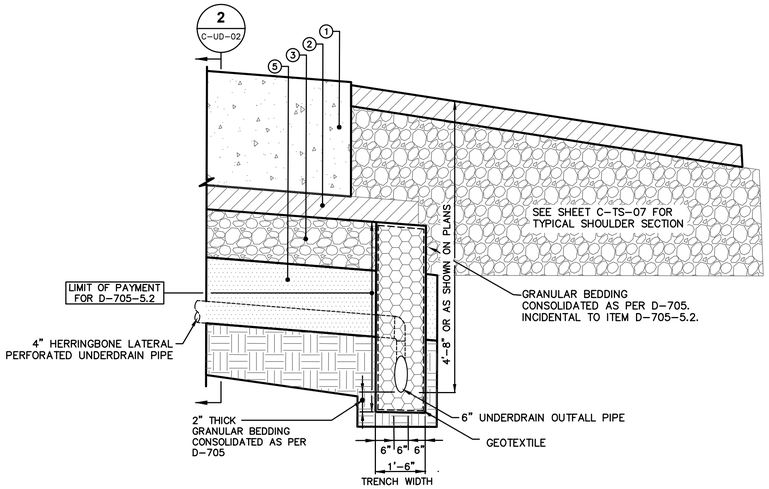

1 C-UD-03 **LONGITUDINAL UNDERDRAIN**

N.T.S.

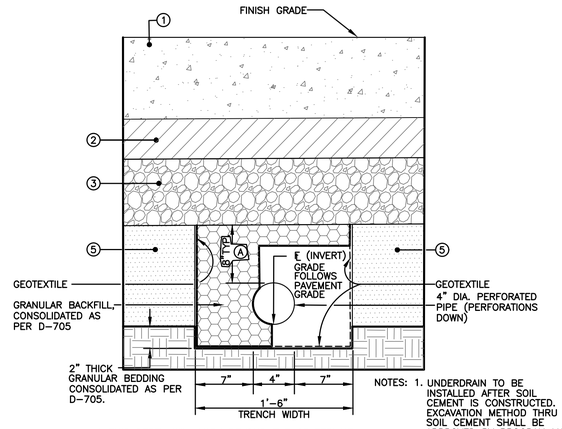

A. THIS DEPTH WILL VARY BEYOND THE CENTERLINE. SEE DETAIL (7/C-UD-02).

NOTES:
1. UNDERDRAIN TO BE INSTALLED AFTER SOIL CEMENT IS CONSTRUCTED. EXCAVATION METHOD THRU SOIL CEMENT SHALL BE APPROVED BY PROGRAM MANAGER ANY DAMAGED SOIL CEMENT SHALL BE REPAIRED OR REPLACED AT NO ADDITIONAL COST TO OWNER.
2. HERRINGBONE UNDERDRAIN GRADE PARALLELS THE OVERLYING PAVEMENT GRADE AT THE DEPTH SHOWN.

2 C-UD-03 **HERRINGBONE LATERAL UNDERDRAIN**

N.T.S.

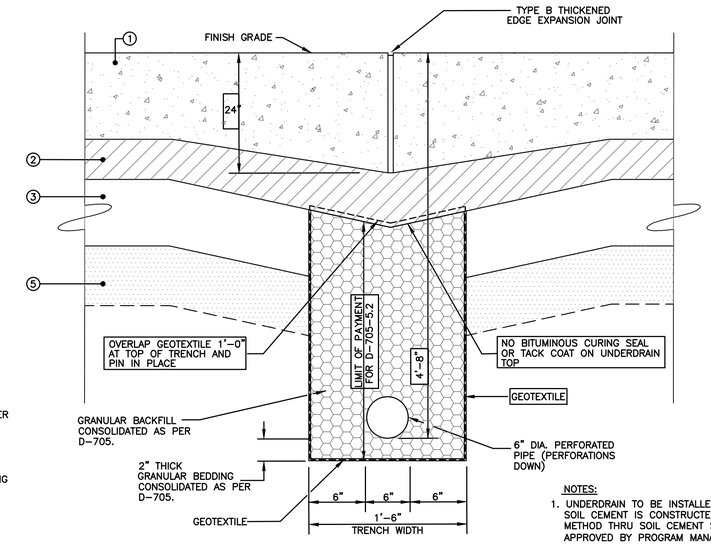

NOTES:
1. UNDERDRAIN TO BE INSTALLED AFTER SOIL CEMENT IS CONSTRUCTED. EXCAVATION METHOD THRU SOIL CEMENT SHALL BE APPROVED BY PROGRAM MANAGER.

3 C-UD-03 **LONGITUDINAL UNDERDRAIN UNDER PORTLAND CEMENT PAVEMENT**

N.T.S.

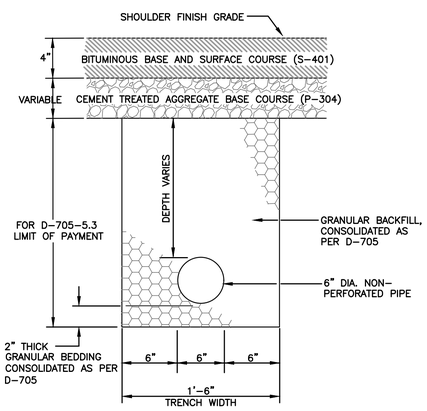

4 C-UD-03 **OUTFALL UNDERDRAIN (UNDER SHOULDER AREAS)**

N.T.S.

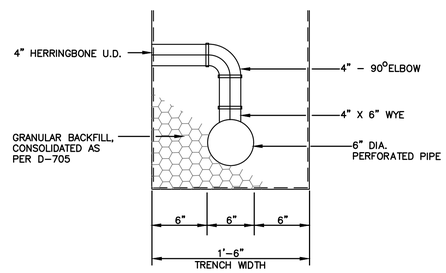

5 C-UD-03 **HERRINGBONE OUTFALL COLLECTOR AT LATERAL**

N.T.S.

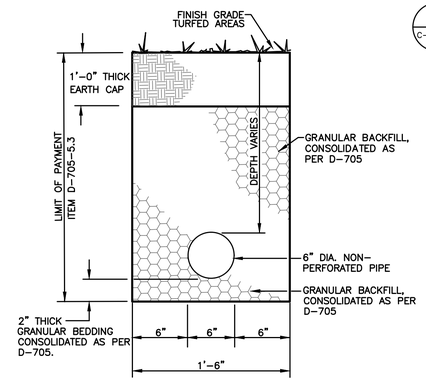

6 C-UD-03 **OUTFALL UNDERDRAIN (UNDER TURFED AREAS)**

N.T.S.

	DESCRIPTION
1	P-501 – 19" THICK CEMENT CONCRETE PAVEMENT
2	P-307 – 4" THICK CEMENT TREATED PERMEABLE BASE COURSE WITH WHITE CURE COMPOUND
3	P-304 – 8" THICK CEMENT TREATED AGGREGATE BASE COURSE WITH BITUMINOUS CURING SEAL – PLACE IN ONE LIFT
4	P-219 – VARIABLE THICKNESS (16" MIN.) AGGREGATE BASE COURSE
5	P-220 – 12" THICK CEMENT TREATED SUBGRADE PLACED IN TWO (2) 6" LIFTS
6	P-403 – 2 ½" THICK BITUMINOUS SURFACE COURSE, 2 ½" THICK BITUMINOUS BASE COURSE
7	P-603 – BITUMINOUS TACK COAT, ESTIMATED AT 0.02-0.05 GAL/SY
8	P-602 – BITUMINOUS PRIME COAT, ESTIMATED AT 0.15-0.30 GAL/SY
9	T-904 – TURF TREATMENT CONSISTING OF ON-SITE TOP SOILING (4") T-905 – SODDING

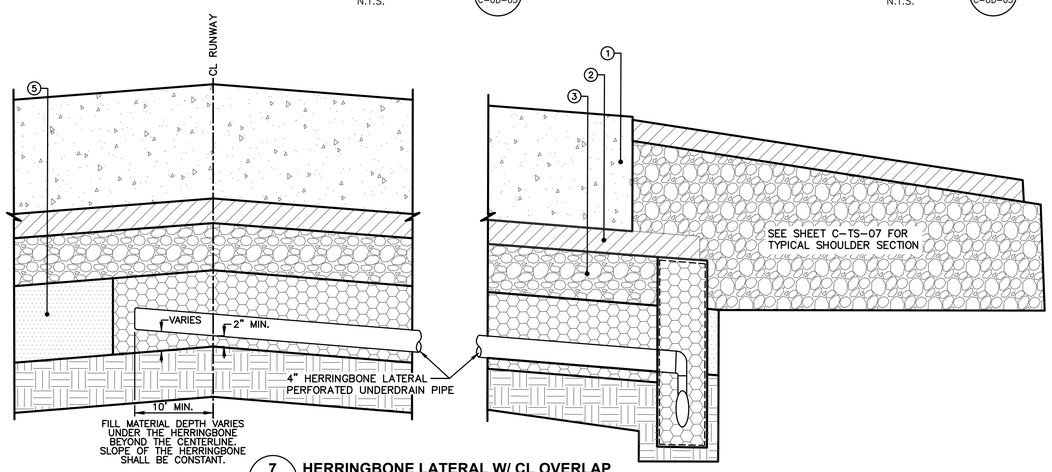

7 C-UD-03 **HERRINGBONE LATERAL W/ CL OVERLAP**

N.T.S.

MEMPHIS - SHELBY COUNTY AIRPORT AUTHORITY
MEMPHIS INTERNATIONAL AIRPORT
2491 WINCHESTER RD. SUITE 113
MEMPHIS, TENNESSEE
38116-3856

PROGRAM MANAGER
PARSONS
Program Management Consultant
Parsons Transportation Group Inc.
Project Office:
4225 Airways Blvd.
Memphis TN, 38116
JOB NO.

Allen&Hoshall
engineers-architects-surveyors
1661 INTERNATIONAL DRIVE
SUITE 100
MEMPHIS, TENNESSEE 38120
PHONE: 901-820-0820
FAX: 901-683-1001
JOB NO. 72198-B

ENGINEER-SUBCONSULTANT
POWERS HILL DESIGN
CIVIL ENGINEERING. CIVIL RESPONSIBILITY.
80 Monroe Avenue
Suite 420
Memphis, TN 38103
Tel: 901.543.8000
JOB NO.

DRAWN BY: GD
CHECKED BY: SH
APPROVED BY: SH

STEVEN HILL REGISTERED ENGINEER AGREEMENT NO. 16212 STATE OF TENNESSEE 03/17/25

ISSUED FOR BID

NO.	DESCRIPTION	DATE	BY

REVISIONS

PROJECT:
TAXIWAY BRAVO RECONFIGURATION (HOT SPOT 1)

SHEET TITLE:
UNDERDRAIN DETAILS

MSCAA NO. 18-1413-02
DWG. FILE NAME C-UD-03.DWG
DATE 03/17/2025
DWG NO. C-UD-03
SCALE NOT TO SCALE
SHEET NO. 46 of 73
FACILITY NO. NONE

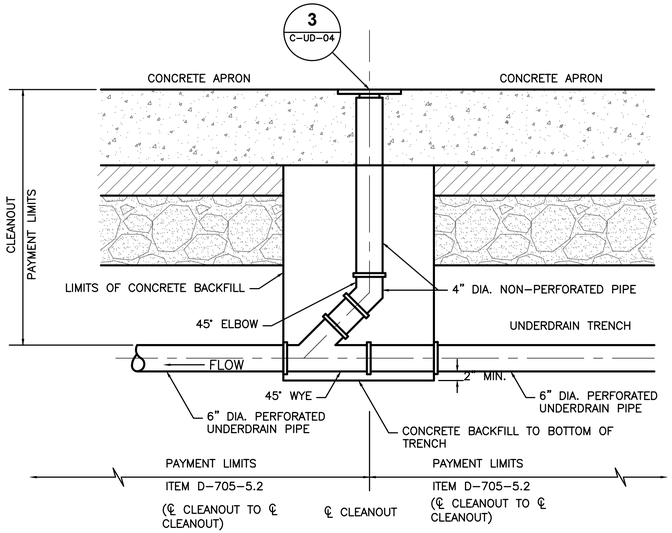

NOTES

1. UNDERDRAIN PIPE INSIDE BACKFILL AREA, SHALL BE NON-PERFORATED.
2. CONCRETE BACKFILL SHALL BE IN ACCORDANCE TO SPECIFICATION P-610 STRUCTURAL CONCRETE.
3. PIPE CONCRETE ELBOWS FOR THE CLEANOUTS ARE INCLUDED IN THE PRICE FOR CLEANOUTS.

1 C-UD-04 IN-LINE CLEANOUT - CONCRETE

PAY ITEM # D-705-5.4 N.T.S.

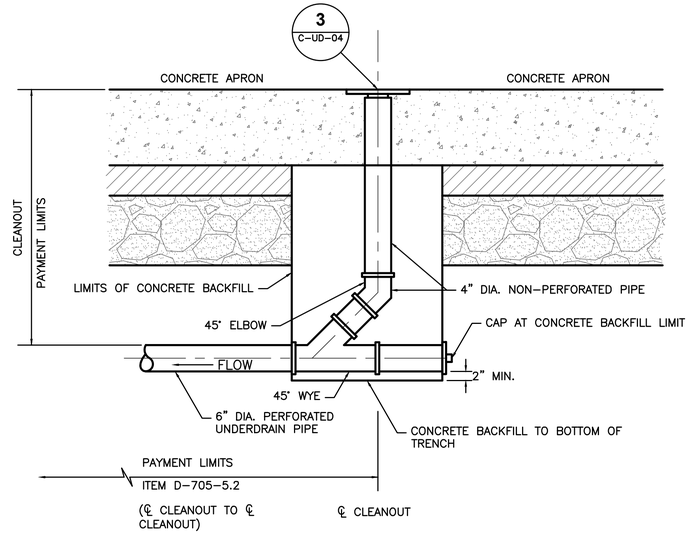

NOTES

1. UNDERDRAIN PIPE INSIDE BACKFILL AREA, SHALL BE NON-PERFORATED.
2. CONCRETE BACKFILL SHALL BE IN ACCORDANCE TO SPECIFICATION P-610 STRUCTURAL CONCRETE.
3. PIPE CONCRETE ELBOWS FOR THE CLEANOUTS ARE INCLUDED IN THE PRICE FOR CLEANOUTS.

2 C-UD-04 END-OF-LINE CLEANOUT - CONCRETE

PAY ITEM # D-705-5.4 N.T.S.

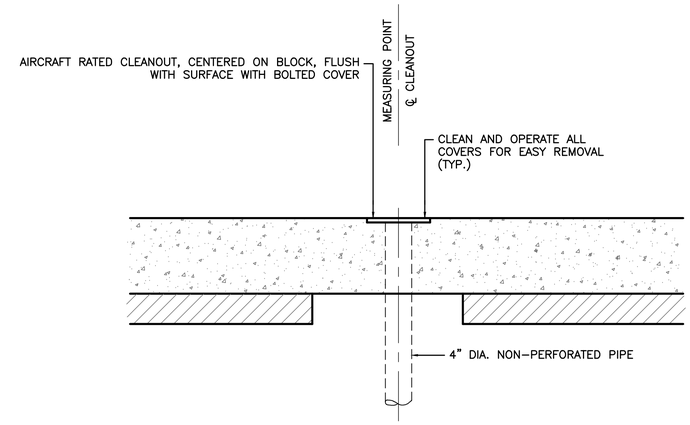

3 C-UD-04 CLEANOUT - CONCRETE

PAY ITEM # D-705-5.4 N.T.S.

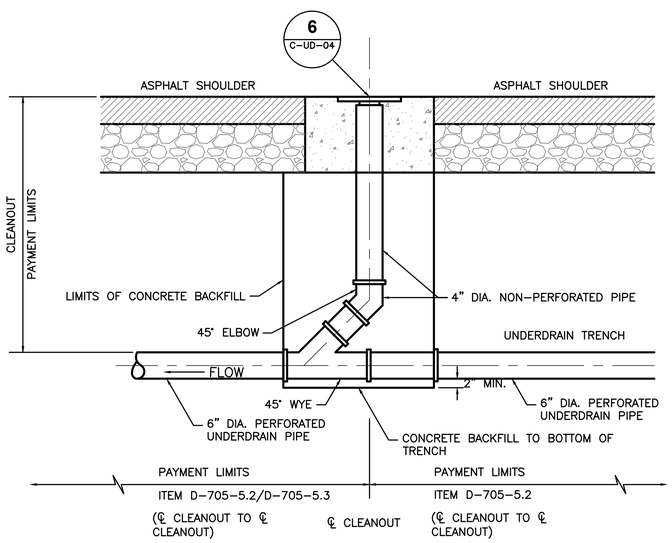

NOTES

1. UNDERDRAIN PIPE INSIDE BACKFILL AREA, SHALL BE NON-PERFORATED.
2. CONCRETE BACKFILL SHALL BE IN ACCORDANCE TO SPECIFICATION P-610 STRUCTURAL CONCRETE.
3. PIPE CONCRETE ELBOWS FOR THE CLEANOUTS ARE INCLUDED IN THE PRICE FOR CLEANOUTS.

4 C-UD-04 IN-LINE CLEANOUT - ASPHALT

PAY ITEM # D-705-5.4 N.T.S.

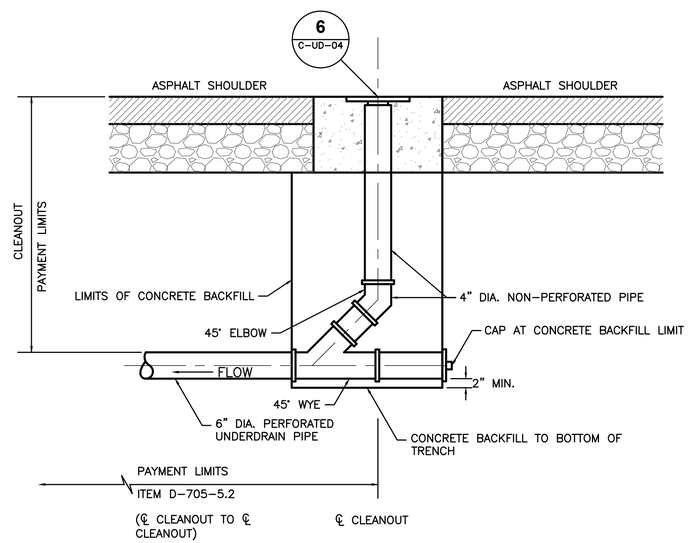

NOTES

1. UNDERDRAIN PIPE INSIDE BACKFILL AREA, SHALL BE NON-PERFORATED.
2. CONCRETE BACKFILL SHALL BE IN ACCORDANCE TO SPECIFICATION P-610 STRUCTURAL CONCRETE.
3. PIPE CONCRETE ELBOWS FOR THE CLEANOUTS ARE INCLUDED IN THE PRICE FOR CLEANOUTS.

5 C-UD-04 END-OF-LINE CLEANOUT - ASPHALT

PAY ITEM # D-705-5.4 N.T.S.

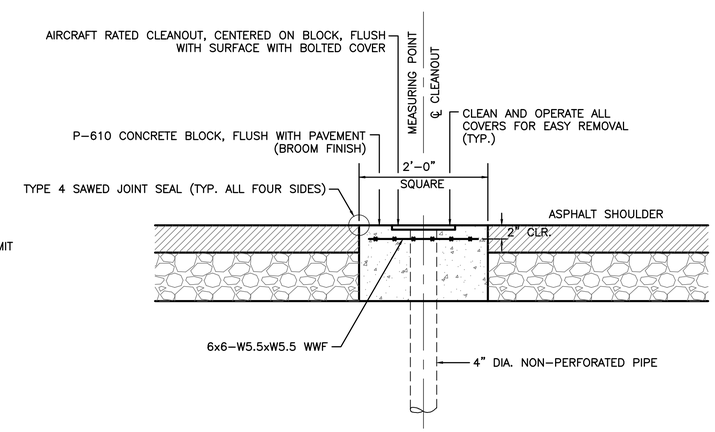

NOTES

1. IF CLEANOUT BLOCK IS PRECAST THEN GROUT THE CLEANOUT INTO PLACE W/NON-SHRINK GROUT.

6 C-UD-04 CLEANOUT - ASPHALT

PAY ITEM # D-705-5.4 N.T.S.

MEMPHIS - SHELBY COUNTY AIRPORT AUTHORITY

MEMPHIS INTERNATIONAL AIRPORT
2491 WINCHESTER RD. SUITE 113
MEMPHIS, TENNESSEE
38116-3856

PROGRAM MANAGER
PARSONS
Program Management Consultant
Parsons Transportation Group Inc.
Project Office:
4225 Airways Blvd.
Memphis TN, 38116
JOB NO.

Allen&Hoshall
engineers-architects-surveyors
1661 INTERNATIONAL DRIVE
SUITE 100
MEMPHIS, TENNESSEE 38120
PHONE: 901-820-0820
FAX: 901-683-1001
JOB NO. 72198-B

ENGINEER-SUBCONSULTANT
POWERS HILL DESIGN
CIVIL ENGINEERING. CIVIL RESPONSIBILITY.
80 Monroe Avenue
Suite 420
Memphis, TN 38103
Tel: 901.543.8000
JOB NO.

DRAWN BY: GD
CHECKED BY: SH
APPROVED BY: SH

STEVEN HILL REGISTERED ENGINEER AGENT No. 16212 STATE OF TENNESSEE 03/17/25

ISSUED FOR BID

NO.	DESCRIPTION	DATE	BY

REVISIONS

PROJECT:
TAXIWAY BRAVO RECONFIGURATION (HOT SPOT 1)

SHEET TITLE:
UNDERDRAIN DETAILS

MSCAA NO. 18-1413-02
DWG. FILE NAME C-UD-04.DWG
DATE 03/17/2025
DWG NO. C-UD-04
SCALE NOT TO SCALE
SHEET NO. 47 of 73
FACILITY NO. NONE

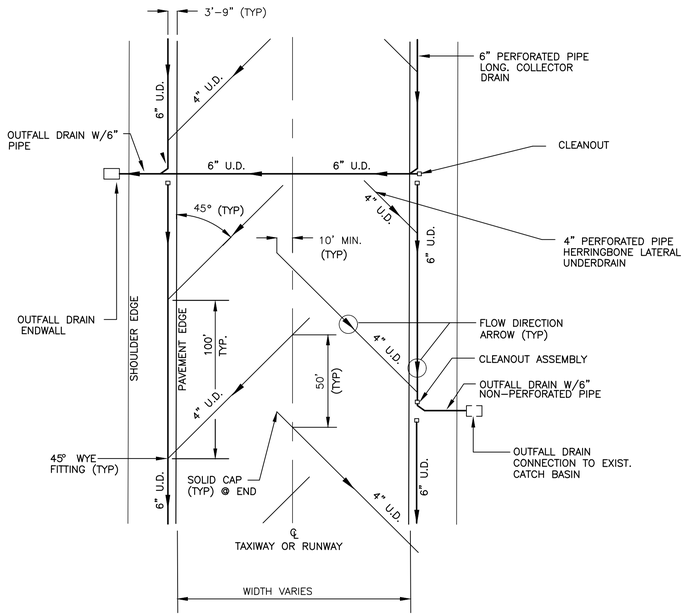

1 C-UD-05 **DETAIL - UNDERDRAIN SYSTEM IN NORMAL CROWNED PAVEMENT AREAS**

N.T.S.

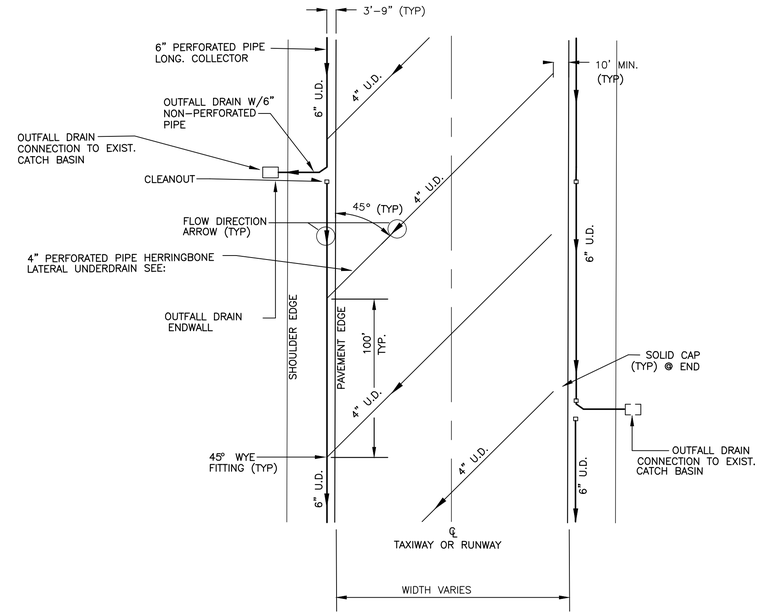

2 C-UD-05 **DETAIL - UNDERDRAIN SYSTEM IN SUPER ELEVATED PAVEMENT AREAS**

N.T.S.

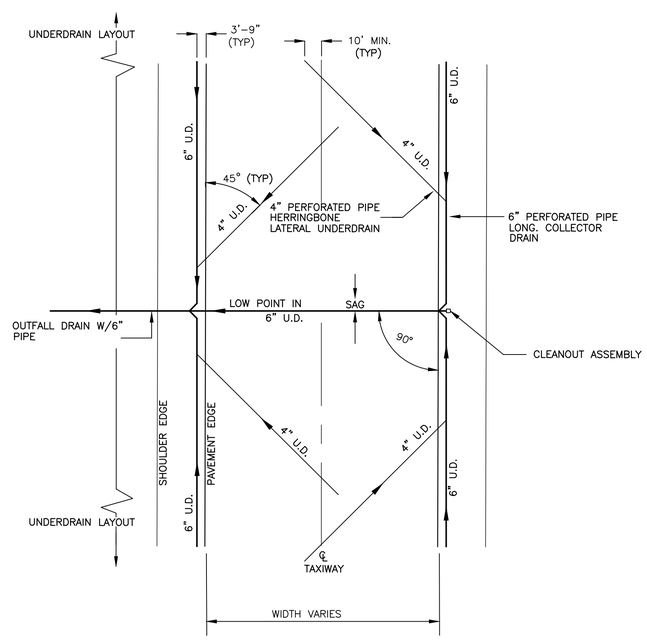

3 C-UD-05 **DETAIL - UNDERDRAIN SYSTEM IN NORMAL CROWNED SAGS**

N.T.S.

MEMPHIS - SHELBY COUNTY AIRPORT AUTHORITY

MEMPHIS INTERNATIONAL AIRPORT
2491 WINCHESTER RD. SUITE 113
MEMPHIS, TENNESSEE
38116-3856

PROGRAM MANAGER
PARSONS
Program Management Consultant
Parsons Transportation Group Inc.
Project Office:
4225 Airways Blvd.
Memphis TN, 38116
JOB NO.

Allen&Hoshall
engineers-architects-surveyors
1661 INTERNATIONAL DRIVE
SUITE 100
MEMPHIS, TENNESSEE 38120
PHONE: 901-820-0820
FAX: 901-683-1001
JOB NO. 72198-B

ENGINEER-SUBCONSULTANT
POWERS HILL DESIGN
CIVIL ENGINEERING. CIVIL RESPONSIBILITY.
80 Monroe Avenue
Suite 420
Memphis, TN 38103
Tel: 901.543.8000
JOB NO.

DRAWN BY: GD
CHECKED BY: SH
APPROVED BY: SH

STEVEN HILL REGISTERED ENGINEER AGENT No. 16212 STATE OF TENNESSEE 03/17/25

ISSUED FOR BID

NO.	DESCRIPTION	DATE	BY

REVISIONS

PROJECT:
TAXIWAY BRAVO RECONFIGURATION (HOT SPOT 1)

SHEET TITLE:
UNDERDRAIN DETAILS

MSCAA NO. 18-1413-02
DWG. FILE NAME C-UD-05.DWG
DATE 03/17/2025
DWG NO. C-UD-05
SCALE NOT TO SCALE
SHEET NO. 48 of 73
FACILITY NO. NONE

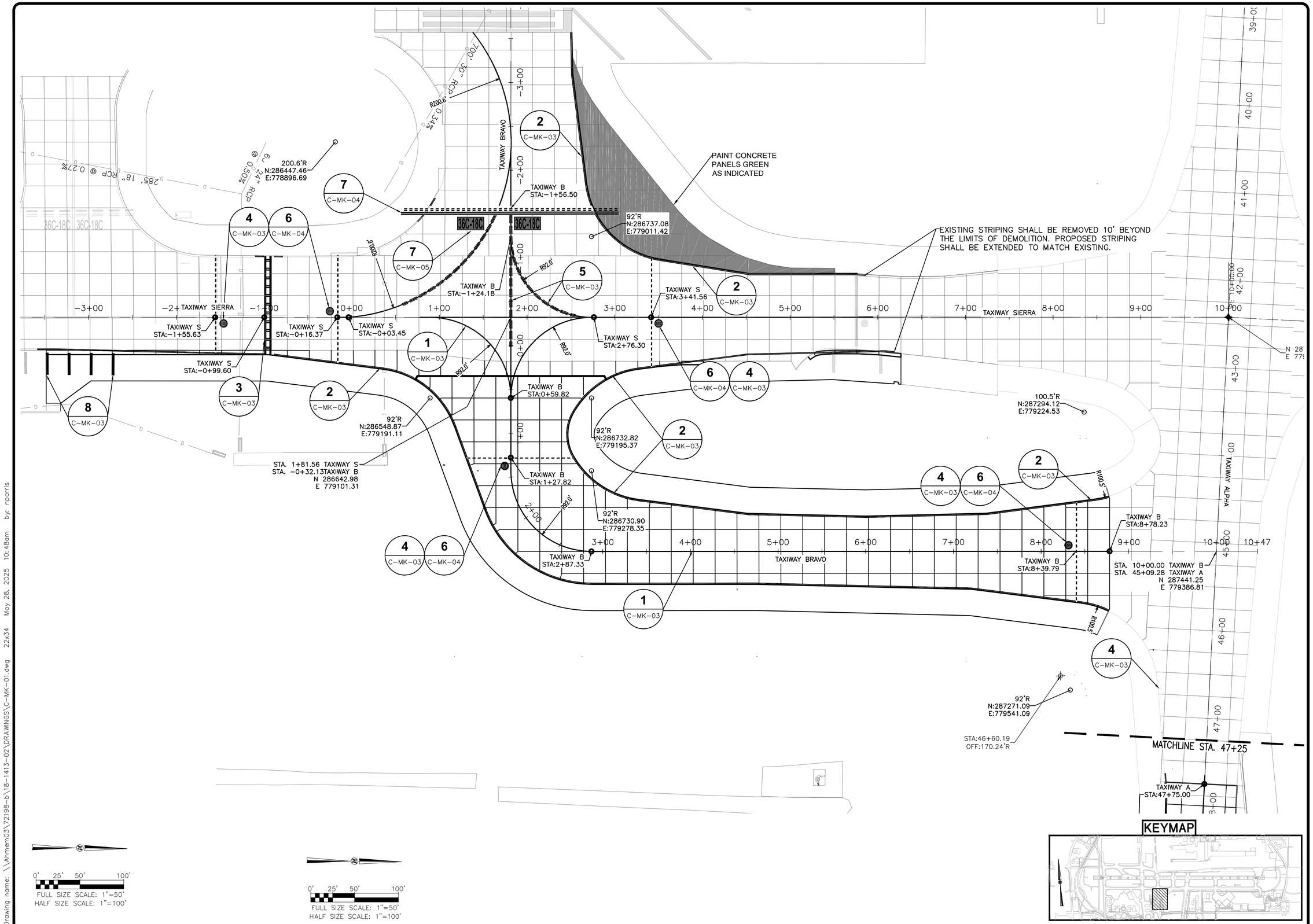

MEMPHIS - SHELBY COUNTY AIRPORT AUTHORITY

MEMPHIS INTERNATIONAL AIRPORT
2491 WINCHESTER RD. SUITE 113
MEMPHIS, TENNESSEE
38116-3856

PROGRAM MANAGER
PARSONS
Program Management Consultant
Parsons Transportation Group Inc.
Project Office:
4225 Airways Blvd.
Memphis TN, 38116
JOB NO.

Allen&Hoshall
engineers-architects-surveyors
1661 INTERNATIONAL DRIVE
SUITE 100
MEMPHIS, TENNESSEE 38120
PHONE: 901-820-0820
FAX: 901-683-1001
JOB NO. 72198-B

ENGINEER-SUBCONSULTANT
POWERS HILL DESIGN
CIVIL ENGINEERING. CIVIL RESPONSIBILITY.
80 Monroe Avenue
Suite 420
Memphis, TN 38103
Tel: 901.543.8000
JOB NO.

DRAWN BY: GD
CHECKED BY: SH
APPROVED BY: SH

STEVEN HILL REGISTERED ENGINEER AGREEMENT No. 15212 STATE OF TENNESSEE 03/17/25

ISSUED FOR BID

NO.	DESCRIPTION	DATE	BY

REVISIONS

PROJECT:
TAXIWAY BRAVO RECONFIGURATION (HOT SPOT 1)

SHEET TITLE:
PAVEMENT MARKING PLAN TAXIWAY BRAVO STA. 0+17.89 TO STA. 9+24.90

MSCAA NO. 18-1413-02
DWG. FILE NAME C-MK-01.DWG
DATE 03/17/2025
DWG NO. C-MK-01
SCALE 1"=50'
SHEET NO. 49 of 73
FACILITY NO. NONE

Drawing name: \\Ahmem03\72198-b\18-1413-02\DRAWINGS\C-MK-01.dwg 22x34 May 28, 2025 10:48am by: nparris

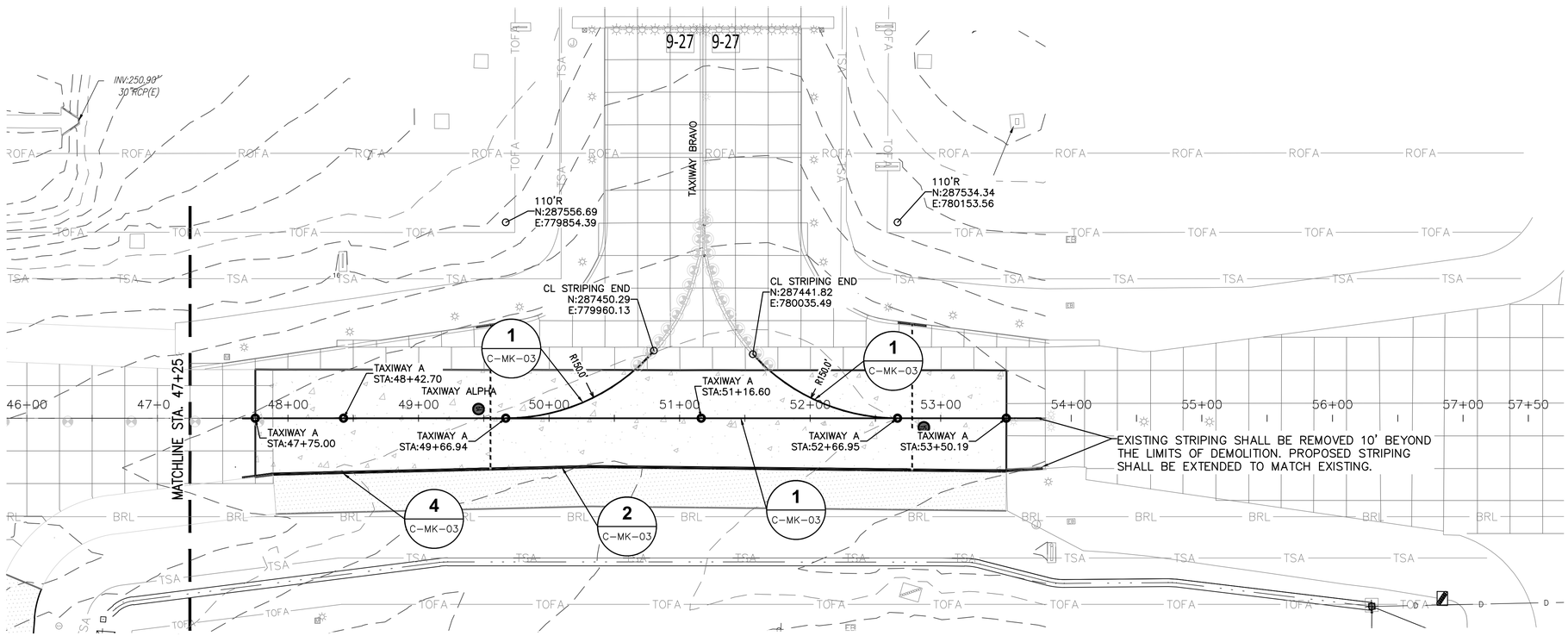

0' 25' 50' 100'

FULL SIZE SCALE: 1"=50'

HALF SIZE SCALE: 1"=100'

KEYMAP

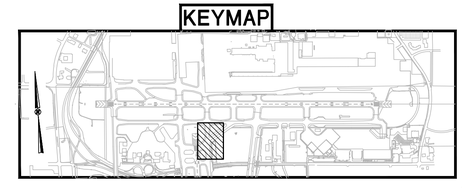

MEMPHIS - SHELBY COUNTY AIRPORT AUTHORITY

MEMPHIS INTERNATIONAL AIRPORT
2491 WINCHESTER RD. SUITE 113
MEMPHIS, TENNESSEE
38116-3856

PROGRAM MANAGER

PARSONS
Program Management Consultant

Parsons Transportation Group Inc.
Project Office:
4225 Airways Blvd.
Memphis TN, 38116

JOB NO.

Allen&Hoshall
engineers-architects-surveyors

1661 INTERNATIONAL DRIVE
SUITE 100
MEMPHIS, TENNESSEE 38120
PHONE: 901-820-0820
FAX: 901-683-1001

JOB NO. 72198-B

ENGINEER-SUBCONSULTANT

POWERS HILL DESIGN
CIVIL ENGINEERING. CIVIL RESPONSIBILITY.

80 Monroe Avenue
Suite 420
Memphis, TN 38103
Tel: 901.543.8000

JOB NO.

DRAWN BY: GD

CHECKED BY: SH

APPROVED BY: SH

STEVEN HILL
REGISTERED ENGINEER
AGENT
No. 16212
STATE OF TENNESSEE
03/17/25

ISSUED FOR BID

NO.	DESCRIPTION	DATE	BY

REVISIONS

PROJECT:

TAXIWAY BRAVO RECONFIGURATION (HOT SPOT 1)

SHEET TITLE:

PAVEMENT MARKING PLAN TAXIWAY ALPHA STA. 47+25.00 TO STA. 53+50.00

MSCAA NO. 18-1413-02

DWG. FILE NAME C-MK-02.DWG

DATE 03/17/2025

DWG NO. C-MK-02

SCALE 1"=50'

SHEET NO. 50 of 73

FACILITY NO. NONE

Drawing name: \\Ahmem03\72198-b\18-1413-02\DRAWINGS\C-MK-02.dwg 22x34 May 28, 2025 10:48am by: nparris

NOTES

1. PAVEMENT MARKING DETAILS SHALL CONFORM TO THE LATEST EDITION OF THE FEDERAL AVIATION ADMINISTRATION'S ADVISORY CIRCULAR AC–150/5340–1. IF A CONFLICT OCCURS BETWEEN THESE PLANS AND THE ADVISORY CIRCULAR, THE ADVISORY CIRCULAR SHALL TAKE PRECEDENCE.
2. PAINT SHALL CONFORM TO ITEM P–620.
3. GLASS BEADS ARE REQUIRED ON ALL YELLOW, PINK, AND WHITE PAVEMENT MARKING.
4. ALL MARKING ON CONCRETE PAVEMENT SHALL BE OUTLINED WITH A 6" BLACK BORDER. THE BORDER IS NOT SHOWN ON SOME DETAILS FOR CLARIFICATION PURPOSES.

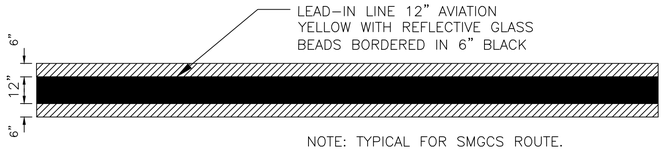

NOTE: TYPICAL FOR SMGCS ROUTE.

(REFERENCE PAY ITEM P–620–5.1)

1 — TAXIWAY CENTERLINE MARKING - 12" (C–MK–03)

N.T.S.

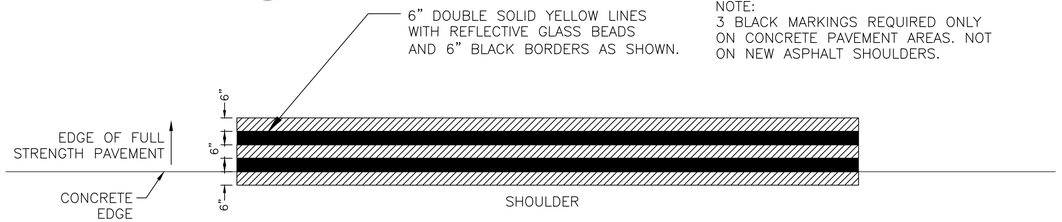

NOTE:
3 BLACK MARKINGS REQUIRED ONLY ON CONCRETE PAVEMENT AREAS. NOT ON NEW ASPHALT SHOULDERS.

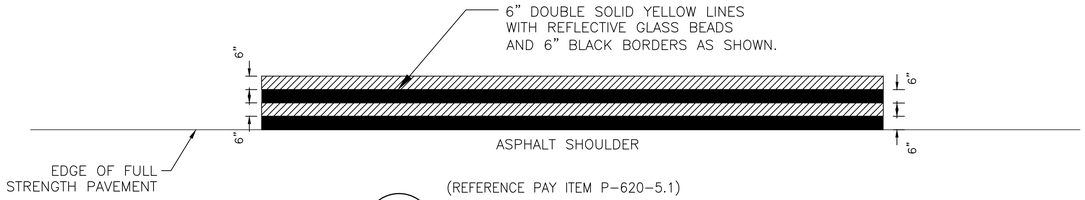

(REFERENCE PAY ITEM P–620–5.1)

2 — EDGE MARKING DETAIL (C–MK–03)

N.T.S.

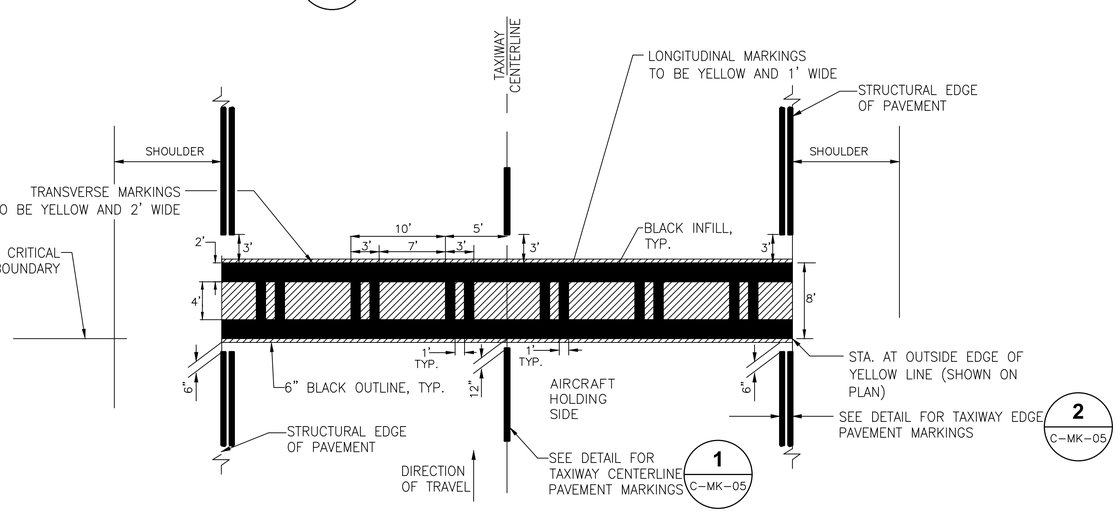

(REFERENCE PAY ITEM P–620–5.4)

3 — ILS CRITICAL AREA HOLD LINE (C–MK–06)

N.T.S.

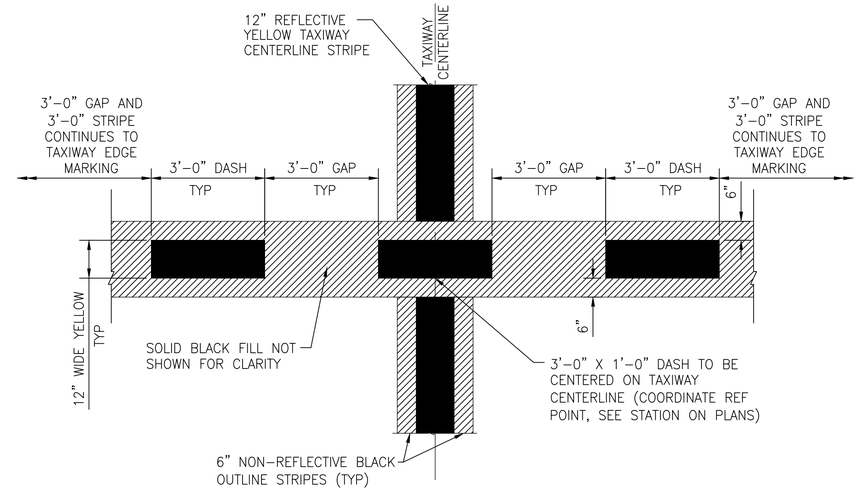

(REFERENCE PAY ITEM P–620–5.3)

4 — TAXIWAY/TAXIWAY INTERMEDIATE HOLDING POSITION MARKING (C–MK–03)

N.T.S.

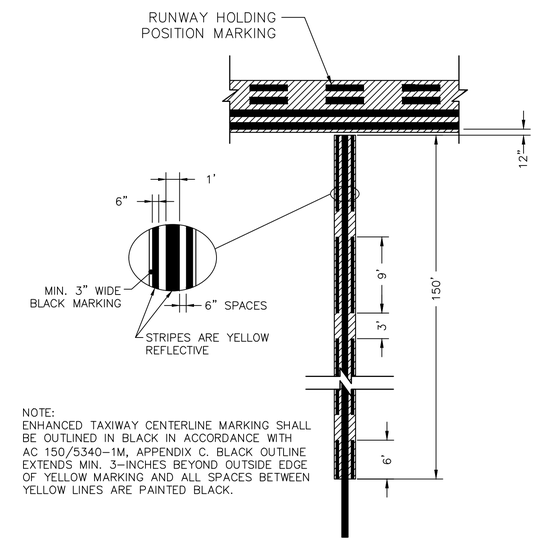

NOTE:
ENHANCED TAXIWAY CENTERLINE MARKING SHALL BE OUTLINED IN BLACK IN ACCORDANCE WITH AC 150/5340–1M, APPENDIX C. BLACK OUTLINE EXTENDS MIN. 3–INCHES BEYOND OUTSIDE EDGE OF YELLOW MARKING AND ALL SPACES BETWEEN YELLOW LINES ARE PAINTED BLACK.

(REFERENCE PAY ITEM P–620–5.5)

5 — ENHANCED TAXIWAY CENTERLINE MARKING (C–MK–03)

N.T.S.

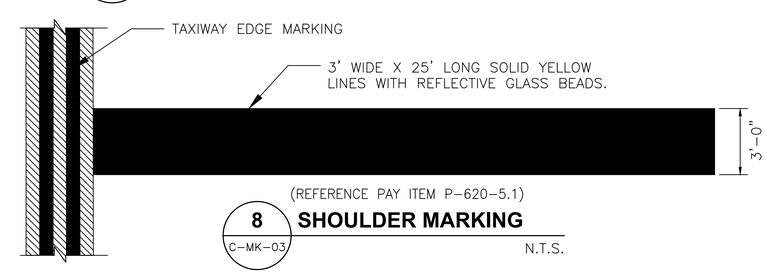

(REFERENCE PAY ITEM P–620–5.1)

8 — SHOULDER MARKING (C–MK–03)

N.T.S.

MEMPHIS - SHELBY COUNTY AIRPORT AUTHORITY
MEMPHIS INTERNATIONAL AIRPORT
2491 WINCHESTER RD. SUITE 113
MEMPHIS, TENNESSEE
38116–3856

PROGRAM MANAGER
PARSONS
Program Management Consultant
Parsons Transportation Group Inc.
Project Office:
4225 Airways Blvd.
Memphis TN, 38116
JOB NO.

Allen&Hoshall
engineers-architects-surveyors
1661 INTERNATIONAL DRIVE
SUITE 100
MEMPHIS, TENNESSEE 38120
PHONE: 901–820–0820
FAX: 901–683–1001
JOB NO. 72198-B

ENGINEER–SUBCONSULTANT
POWERS HILL DESIGN
CIVIL ENGINEERING. CIVIL RESPONSIBILITY.
80 Monroe Avenue
Suite 420
Memphis, TN 38103
Tel: 901.543.8000
JOB NO.

DRAWN BY: GD
CHECKED BY: SH
APPROVED BY: SH

STEVEN HILL REGISTERED ENGINEER AGENT No. 16212 STATE OF TENNESSEE 03/17/25

ISSUED FOR BID

NO.	DESCRIPTION	DATE	BY

REVISIONS

PROJECT:
TAXIWAY BRAVO RECONFIGURATION (HOT SPOT 1)

SHEET TITLE:
PAVEMENT MARKING DETAILS

MSCAA NO. 18-1413-02
DWG. FILE NAME C-MK-03.DWG
DATE 03/17/2025
DWG NO. C-MK-03
SCALE N.T.S.
SHEET NO. 51 of 73
FACILITY NO. NONE

NOTES:

1. INTERMEDIATE HOLD POSITION MARKING TO BE PAID FOR AS ITEM P-620-5.3 PER SF. THE CIRCULAR INSCRIPTION AS SHOWN TO BE PAID FOR AS ITEM P-620-5.7 PER EACH.
2. THE PROGRAM MANAGER WILL DETERMINE THE EXACT LOCATION FOR THE GEOGRAPHIC POSITION MARKING.

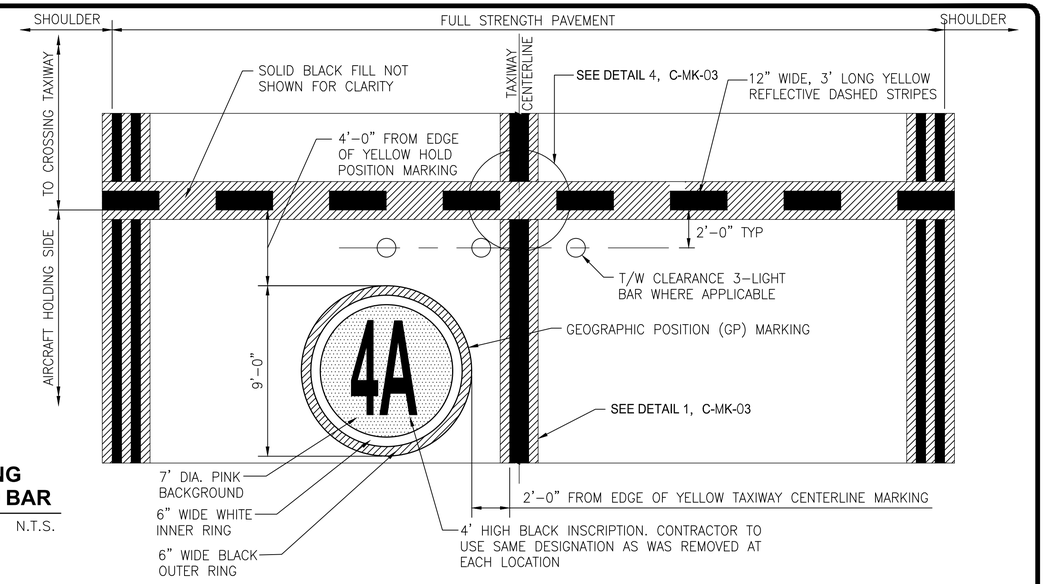

6 / C-MK-04 INTERMEDIATE HOLDING POSITION MARKING GEOGRAPHIC POSITION MARKING WITH HOLD BAR

N.T.S.

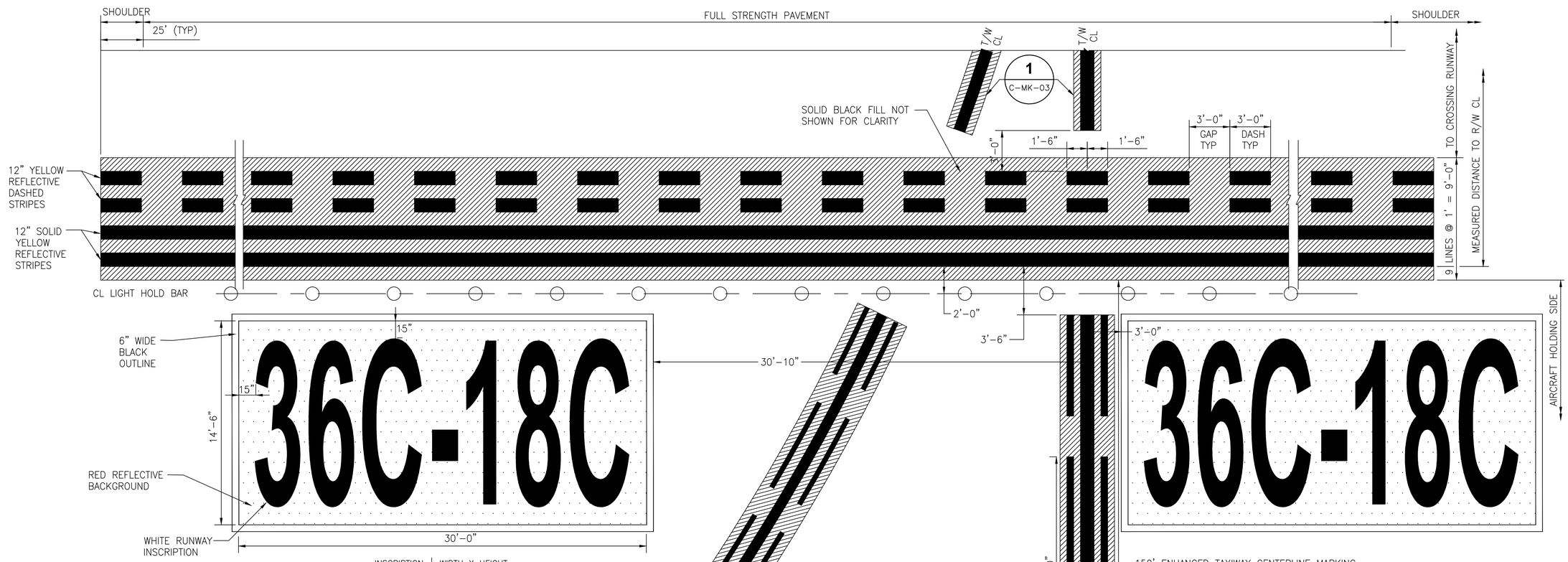

INSCRIPTION	WIDTH X HEIGHT
36C-18C	27.5' X 12'

1. INSCRIPTIONS ARE 12 FEET IN HEIGHT AND FOLLOW CRITERIA PROVIDED IN AC 150/5340-1M, APPENDIX B.
2. RED BACKGROUND (REFLECTIVE) EXTENDS 15" BEYOND INSCRIPTION AS SHOWN.
3. SEE MARKING PLAN FOR CORRECT INSCRIPTION AT EACH TAXIWAY LOCATION.

(REFERENCE PAY ITEM P-620-5.5)

7 / C-MK-04 SURFACE PAINTED HOLDING POSITION SIGNS

MEMPHIS - SHELBY COUNTY AIRPORT AUTHORITY

MEMPHIS INTERNATIONAL AIRPORT
2491 WINCHESTER RD. SUITE 113
MEMPHIS, TENNESSEE
38116-3856

PROGRAM MANAGER
PARSONS
Program Management Consultant
Parsons Transportation Group Inc.
Project Office:
4225 Airways Blvd.
Memphis TN, 38116
JOB NO.

Allen&Hoshall
engineers-architects-surveyors
1661 INTERNATIONAL DRIVE
SUITE 100
MEMPHIS, TENNESSEE 38120
PHONE: 901-820-0820
FAX: 901-683-1001
JOB NO. 72198-B

ENGINEER-SUBCONSULTANT
POWERS HILL DESIGN
CIVIL ENGINEERING. CIVIL RESPONSIBILITY.
80 Monroe Avenue
Suite 420
Memphis, TN 38103
Tel: 901.543.8000
JOB NO.

DRAWN BY: GD
CHECKED BY: SH
APPROVED BY: SH

STEVEN HILL REGISTERED ENGINEER AGENT No. 116212 STATE OF TENNESSEE 03/17/25

ISSUED FOR BID

NO.	DESCRIPTION	DATE	BY

REVISIONS

PROJECT:

TAXIWAY BRAVO RECONFIGURATION (HOT SPOT 1)

SHEET TITLE:

PAVEMENT MARKING DETAILS

MSCAA NO. 18-1413-02
DWG. FILE NAME C-MK-04.DWG
DATE 03/17/2025
DWG NO. C-MK-04
SCALE N.T.S.
SHEET NO. 52 of 73
FACILITY NO. NONE

Drawing name: \\Ahmem03\72198-b\18-1413-02\DRAWINGS\C-MK-04.dwg 22x34 May 28, 2025 10:49am by: nparris

DEMO LEGEND

- EXISTING AIRFIELD LIGHT
- REMOVE AIRFIELD LIGHT FIXTURE AND XFMR, RETURN TO OWNER OR DISPOSE AS DIRECTED, DEMO BASE
- DISPOSE OF EDGE LIGHT FIXTURE AND XFMR, DEMO BASE
- REMOVE LIGHT FIXTURE, XFMR. & CAN BASE & TURN OVER TO OWNER.
- REMOVE LIGHT FIXTURE & XFMR. & INSTALL BLANK COVER, TURN LIGHT FIXTURE OVER TO OWNER
- DEMO SIGN FOUNDATION UPON REMOVING EXISTING LED SIGN
- REMOVE EXISTING PULLBOX/MANHOLE
- REMOVE FIXTURE AND XFMR, INSTALL 3/4" BLANK LID ON EXISTING BASE
- EXISTING JUNCTION CAN
- EXISTING SIGN
- EXISTING JUNCTION CAN PLAZA 4 CANS
- EXISTING JUNCTION CAN PLAZA 6 CANS
- EXISTING JUNCTION CAN PLAZA 7 CANS
- EXISTING JUNCTION CAN PLAZA 9 CANS
- EB EXISTING MANHOLE/HANDHOLE/PULLBOX
- UGE EXISTING LIGHTING CABLE/CONDUIT
- DEMO DUCT BANK
- DEMO CONDUIT

[2-TAE2]
CIRCUIT IDENTIFICATION
NUMBER OF WIRES

CLOSED BRACKET = EXISTING CIRCUIT CONDUCTORS
OPEN BRACKET = NEW CIRCUIT CONDUCTORS
LINE THROUGH CIRCUIT ID IDENTIFIES CIRCUITS TO BE REMOVED FROM EXISTING DUCT/CONDUIT

LIGHTING DEMOLITION NOTES:

1. EXISTING AIRFIELD LIGHTING CIRCUITS MUST REMAIN IN SERVICE DURING ALL HOURS OF DARKNESS AND DURING INSTRUMENT METEOROLOGICAL CONDITIONS (BELOW 1000' OF CEILING OR 3 MILES VISIBILITY) UNLESS PRIOR APPROVAL HAS BEEN OBTAINED FROM AIRPORT OPERATIONS.
2. AFTER REMOVAL OF THE DESIGNATED AIRFIELD LIGHTS, THE CONTRACTOR SHALL REESTABLISH THE SERIES CIRCUIT IN ORDER TO MEET THE REQUIREMENT OF NOTE 1. TEMPORARY JUMPER WIRES IN CONDUIT (SEE SPEC. ITEMS L-100 AND L-108) SHALL BE PROVIDED AS NECESSARY TO ROUTE THE CIRCUIT CLEAR OF THE CONSTRUCTION ACTIVITY.
3. TEMPORARY JUMPER WIRES SHALL NOT BE REUSED AS NEW CABLE FOR LIGHTING CIRCUITS. ABANDONED WIRES MAY BE REUSED FOR TEMPORARY JUMPERS ASSUMING THEY ARE IN SATISFACTORY CONDITION TO MEET NOTE 1 REQUIREMENTS.
4. TEMPORARY JUMPERS IN CONDUIT SHALL BE PROTECTED FROM MOWERS AND VEHICULAR TRAFFIC BY A MEANS SUITABLE FOR THE SITUATION. DIRT COVER, OR OTHER MEANS OF PROTECTION MAY BE NECESSARY AND ARE SUBJECT TO APPROVAL OF PROGRAM MANAGER.
5. CONTRACTOR SHALL REMOVE ABANDONED CIRCUIT CONDUCTORS FROM CONDUITS, DUCT BANKS, LIGHT BASES, JUNCTION CANS, MANHOLES, AND PULLBOXES. NO SEPARATE PAYMENT SHALL BE MADE.
6. CONTRACTOR SHALL REFER TO PHASING AND BARRICADE PLANS FOR PHASE LIMITS AND SEQUENCING.
7. CONTRACTOR SHALL FIELD VERIFY EXISTING CONDUIT, DUCT, AND CIRCUIT CONFIGURATION. INFORMATION SHOWN IS BASED ON DATA AVAILABLE AT TIME OF DESIGN AND MAY NOT REFLECT ACTUAL EXISTING CONDITIONS AT TIME OF CONSTRUCTION.

GENERAL NOTES:

1. INFORMATION HEREIN IS REPRESENTATIVE AND HAS BEEN USED BY THE ENGINEER AS A BASIS OF DESIGN. NEITHER THE OWNER NOR THE DESIGNER ASSUMES ANY RESPONSIBILITY FOR DISCREPANCIES IN ANY OF THE SOURCE DATA FROM WHICH THE INFORMATION HEREIN WAS DEVELOPED AND WHICH REFLECTED THE BEST INFORMATION AVAILABLE AT THE TIME OF THE DESIGN.
2. THE ELECTRICAL CONTRACTOR SHALL FURNISH PLANS SHOWING CABLE RUNS, SPLICES, AND METHOD TO PULL, RACK, AND TERMINATE CABLES. THE CONTRACTOR SHALL OBTAIN APPROVAL OF THE PROGRAM MANAGER AND THE MEMPHIS MAINTENANCE DEPARTMENT FOR EACH CABLE PLAN PRIOR TO CABLE INSTALLATION.

MEMPHIS - SHELBY COUNTY AIRPORT AUTHORITY

MEMPHIS INTERNATIONAL AIRPORT
2491 WINCHESTER RD. SUITE 113
MEMPHIS, TENNESSEE
38116-3856

PROGRAM MANAGER
PARSONS
Program Management Consultant
Parsons Transportation Group Inc.
Project Office:
4225 Airways Blvd.
Memphis TN, 38116
JOB NO.

Allen&Hoshall
engineers-architects-surveyors
1661 INTERNATIONAL DRIVE
SUITE 100
MEMPHIS, TENNESSEE 38120
PHONE: 901-820-0820
FAX: 901-683-1001
JOB NO. 72198-B

ENGINEER-SUBCONSULTANT
POWERS HILL DESIGN
CIVIL ENGINEERING. CIVIL RESPONSIBILITY.
80 Monroe Avenue
Suite 420
Memphis, TN 38103
Tel: 901.543.8000
JOB NO.

DRAWN BY: RNP
CHECKED BY: HP
APPROVED BY: TG

MICHAEL S. COLLINS
REGISTERED ENGINEER
No. 104198
STATE OF TENNESSEE
3-17-25

ISSUED FOR BID

NO.	DESCRIPTION	DATE	BY

REVISIONS

PROJECT:
TAXIWAY BRAVO RECONFIGURATION (HOT SPOT 1)

SHEET TITLE:
LIGHTING DEMOLTION LEGEND AND NOTES

MSCAA NO. 18-1413-02
DWG. FILE NAME E-DP-00.DWG
DATE 03/17/2025
DWG NO. E-DP-00
SCALE
SHEET NO. 53 of 73
FACILITY NO. NONE

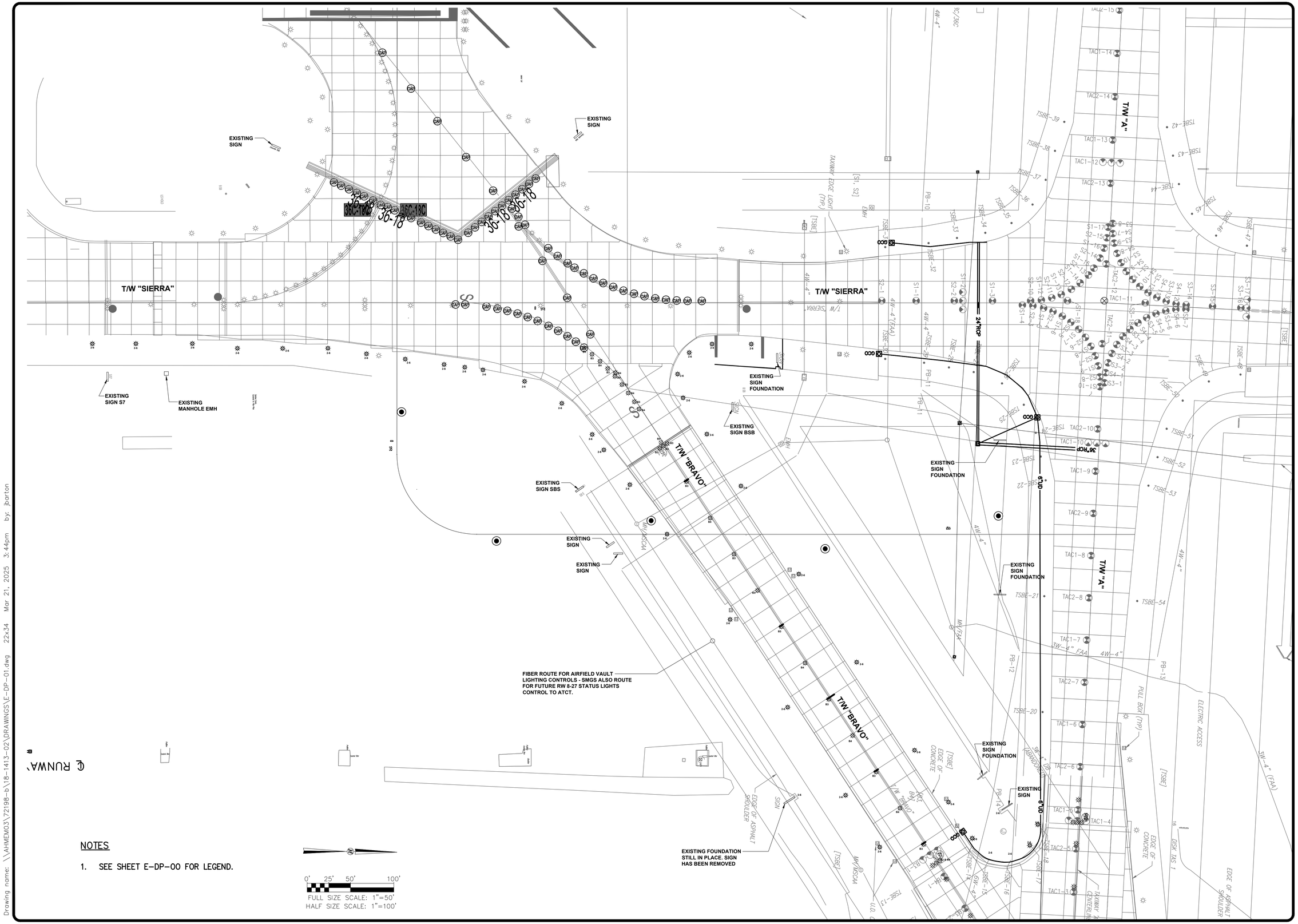

NOTES

1. SEE SHEET E-DP-00 FOR LEGEND.

0' 25' 50' 100'
FULL SIZE SCALE: 1"=50'
HALF SIZE SCALE: 1"=100'

Drawing name: \\AHMEM03\72198-b\18-1413-02\DRAWINGS\E-DP-01.dwg 22x34 Mar 21, 2025 3:44pm by: jbarton

MEMPHIS - SHELBY COUNTY AIRPORT AUTHORITY

MEMPHIS INTERNATIONAL AIRPORT
2491 WINCHESTER RD. SUITE 113
MEMPHIS, TENNESSEE
38116-3856

PROGRAM MANAGER
PARSONS
Program Management Consultant
Parsons Transportation Group Inc.
Project Office:
4225 Airways Blvd.
Memphis TN, 38116
JOB NO.

Allen&Hoshall
engineers-architects-surveyors
1661 INTERNATIONAL DRIVE
SUITE 100
MEMPHIS, TENNESSEE 38120
PHONE: 901-820-0820
FAX: 901-683-1001
JOB NO. 72198-B

ENGINEER-SUBCONSULTANT
POWERS HILL DESIGN
CIVIL ENGINEERING. CIVIL RESPONSIBILITY.
80 Monroe Avenue
Suite 420
Memphis, TN 38103
Tel: 901.543.8000
JOB NO.

DRAWN BY: RNP
CHECKED BY: HP
APPROVED BY: TG

MICHAEL S. COLLINS
REGISTERED ENGINEER
No. 114118
STATE OF TENNESSEE
3-17-25

ISSUED FOR BID

NO.	DESCRIPTION	DATE	BY

REVISIONS

PROJECT:

TAXIWAY BRAVO RECONFIGURATION (HOT SPOT 1)

SHEET TITLE:

LIGHTING DEMOLITION PLAN STA. 10+50.00 TO STA. 19+50.00

MSCAA NO. 18-1413-02
DWG. FILE NAME E-DP-01.DWG
DATE 03/17/2025
DWG NO. E-DP-01
SCALE 1"=50'
SHEET NO. 54 of 73
FACILITY NO. NONE

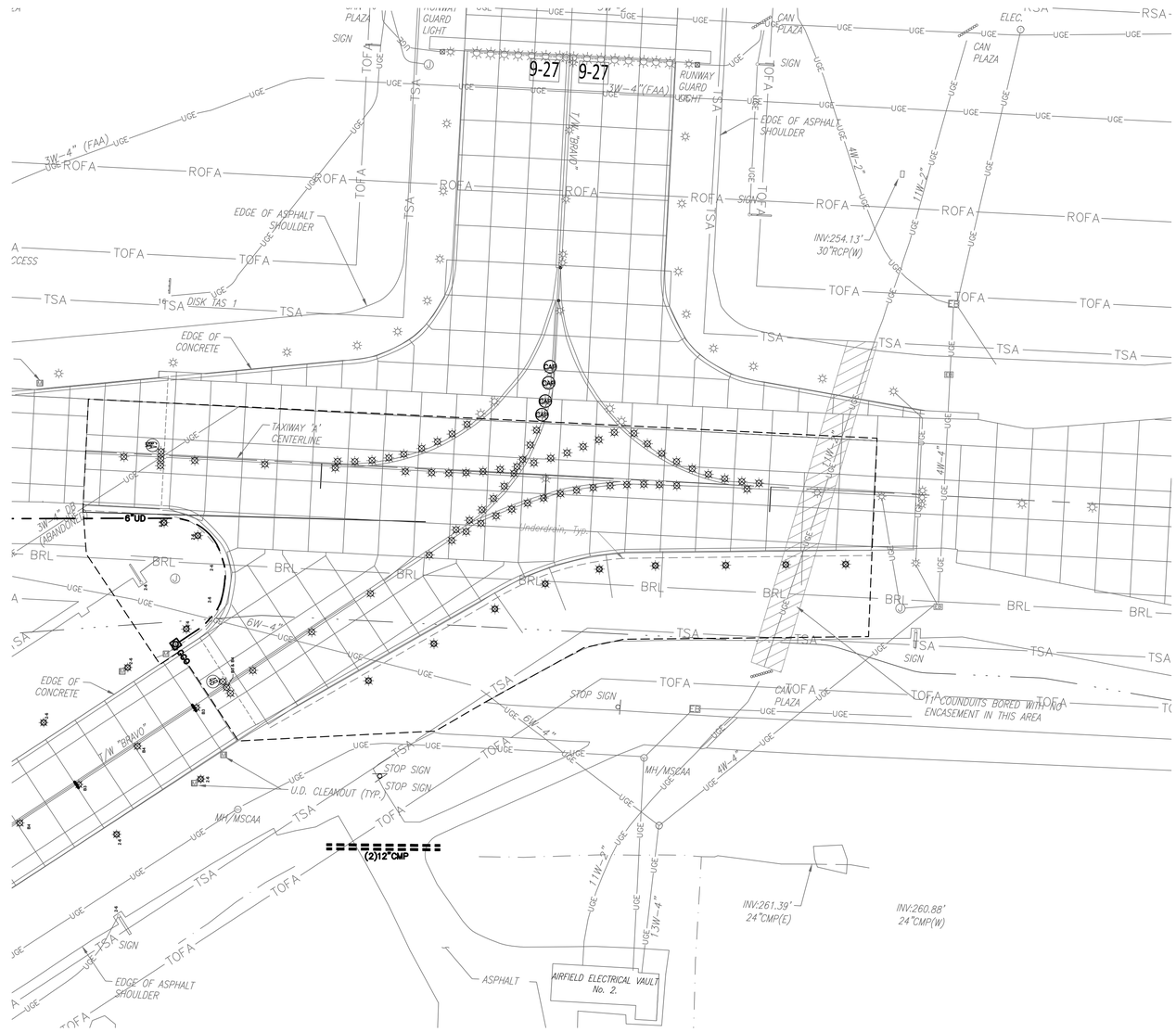

NOTES

1. SEE SHEET E-DP-00 FOR LEGEND.

0' 25' 50' 100'

FULL SIZE SCALE: 1"=50'
HALF SIZE SCALE: 1"=100'

Drawing name: \\AHMEM03\72198-b\18-1413-02\DRAWINGS\E-DP-02.dwg 22x34 Mar 21, 2025 3:45pm by: jbarton

MEMPHIS - SHELBY COUNTY AIRPORT AUTHORITY

MEMPHIS INTERNATIONAL AIRPORT
2491 WINCHESTER RD. SUITE 113
MEMPHIS, TENNESSEE
38116-3856

PROGRAM MANAGER
PARSONS
Program Management Consultant
Parsons Transportation Group Inc.
Project Office:
4225 Airways Blvd.
Memphis TN, 38116
JOB NO.

Allen&Hoshall
engineers-architects-surveyors
1661 INTERNATIONAL DRIVE
SUITE 100
MEMPHIS, TENNESSEE 38120
PHONE: 901-820-0820
FAX: 901-683-1001
JOB NO. 72198-B

ENGINEER-SUBCONSULTANT
POWERS HILL DESIGN
CIVIL ENGINEERING. CIVIL RESPONSIBILITY.
80 Monroe Avenue
Suite 420
Memphis, TN 38103
Tel: 901.543.8000
JOB NO.

DRAWN BY: RNP
CHECKED BY: HP
APPROVED BY: TG

MICHAEL S. COLLINS
Registered Engineer
No. 114198
STATE OF TENNESSEE
3-17-25

ISSUED FOR BID

NO.	DESCRIPTION	DATE	BY

REVISIONS

PROJECT:
TAXIWAY BRAVO RECONFIGURATION (HOT SPOT 1)

SHEET TITLE:
LIGHTING DEMOLITION PLAN STA. 47+25.00 TO STA. 53+50.00

MSCAA NO. 18-1413-02
DWG. FILE NAME E-DP-02.DWG
DATE 03/17/2025
DWG NO. E-DP-02
SCALE 1"=50'
SHEET NO. 55 of 73
FACILITY NO. NONE

GENERAL NOTES

1. EXERCISE EXTREME CAUTION WORKING IN AND AROUND THE RUNWAY AND TAXIWAY ENVIRONMENT. ALL CIRCUITS NOT MARKED FOR REMOVAL OR ABANDONMENT SHALL BE PROTECTED BY THE CONTRACTOR DURING CONSTRUCTION. IMMEDIATELY REPORT ANY DISRUPTION OR DAMAGE TO EQUIPMENT, NOT SCHEDULED FOR REMOVAL OR ABANDONMENT, TO THE RPR.
2. THE EXISTING AND PROPOSED LOCATIONS OF LIGHTING CABLES ARE APPROXIMATE. THE CONTRACTOR SHALL BE RESPONSIBLE FOR FIELD LOCATING AND IDENTIFYING THE EXISTING LIGHTING CIRCUITS TO DETERMINE THEIR EXACT ROUTING. THE CONTRACTOR SHALL ALSO BE RESPONSIBLE FOR MAINTAINING THE LIGHTING SYSTEMS IN A WORKING CONDITION UNTIL THE NEW LIGHTING CIRCUITS HAVE BEEN INSTALLED AND TESTED. THE CONTRACTOR SHALL PROACTIVELY AND EXPEDITIOUSLY ACCOMPLISH THIS CABLE IDENTIFICATION WORK PRIOR TO PERFORMING ANY MODIFICATIONS TO THE LIGHTING CIRCUITS. COORDINATE IDENTIFICATION WORK WITH THE OWNER AND RPR AND MAKE ALL CORRECTIONS, ADDICTIONS, ETC. ON THE AS-BUILT DRAWINGS.
3. THE CONTRACTOR SHALL PERFORM MEGGER TESTS ON EACH REGULATOR CIRCUIT PRIOR TO ANY WORK ON THE ELECTRICAL SYSTEM AND AFTER THE ACCEPTANCE TEST PERIOD.
4. THE CONTRACTOR SHALL CHECK THE LOAD ON EACH REGULATOR PRIOR TO ANY WORK ON THE ELECTRICAL SYSTEM AND AFTER THE ACCEPTANCE TEST PERIOD.
5. CONDUITS AND DUCTS UNDER PAVED AREAS SHALL BE CONCRETE ENCASED.
6. CONDUITS AND DUCTS UNDER NON-PAVED AREAS SHALL BE NON-ENCASED UNLESS OTHERWISE NOTED.
7. DURING CONSTRUCTION, PROTECT EXISTING EQUIPMENT, DUCTS, CONDUITS AND CABLES THAT ARE TO REMAIN IN PLACE. REPAIR OR REPLACE ANY ITEM DAMAGED BY THE CONTRACTOR TO THE SATISFACTION OF THE ITEM'S OWNER AT NO ADDITIONAL COST TO THE PROJECT.
8. SEE THIS SHEET FOR LIGHT FIXTURE SCHEDULE.
9. SEE SHEET E-DT-8 AND E-DT-9 FOR LIGHTING COORDINATES, FIXTURE TYPE, COLOR, AND SPECIFIC FIXTURE/LIGHT BASE NOTES.
10. SEE SHEET E-DT-10 THROUGH E-DT-15 FOR CIRCUIT PICTORIALS.
11. CONTRACTOR SHALL OBSERVE ALL CIRCUIT PICTORIALS TO ENSURE CONDUIT CONNECTIVITY BETWEEN LIGHT BASES AS REQUIRED TO ESTABLISH CIRCUITRY.
12. SEE SHEET E-DT-16 FOR CIRCUIT LOADING SCHEDULE.
13. REFER TO SPEC SECTION L-108 UNDERGROUND POWER CABLE FOR WIRING CONDUCTOR SIZES AND CABLE TYPES FOR AIRFIELD RUNWAY AND TAXIWAY LIGHTS AND SIGNS.

AIRFIELD LIGHT FIXTURE SCHEDULE

SYMBOL	FIXTURE TYPE	STYLE	FIXTURE USE	DESCRIPTION	COLOR	LAMP(S)	ISOLATION TRANSFORMER WATTS/AMPS	REFERENCE PAY ITEM
●	L-852T	3	T/W EDGE LIGHT LED	SEMIFLUSH	BLUE	LED	1-25/6.6	L-125-5.6
⊕/⊕	L-852C	3	T/W ℄ BIDIRECTIONAL STRAIGHT (NARROW)	SEMIFLUSH	*/*	LED	1-25/6.6	L-125-5.1
	L-852D	3	T/W ℄ BIDIRECTIONAL CURVED (WIDE)	SEMIFLUSH	*/*	LED	1-45/6.6	L-125-5.3
⊕	L-852D	3	T/W ℄ UNIDIRECTIONAL	SEMIFLUSH	GREEN	LED		L-125-5.4
⊕⊕⊕	L-852C	3	T/W ℄ CLEARANCE BAR	SEMIFLUSH	YELLOW	LED	1-15/6.6	L-125-5.2
⊗	L-852F	1	T/W ℄ OMNIDIRECTIONAL	SEMIFLUSH	YELLOW			L-125-5.5

* SEE LAYOUT SHEETS FOR FIXTURE COLOR

* = FILTER COLOR, GREEN UNLESS OTHERWISE SPECIFIED ON LIGHTING COORDINATE OR LAYOUT SHEETS

LEGEND

- EXISTING AIRFIELD LIGHT
- T/W ℄ BIDIRECTIONAL LIGHT
- LIGHT BASE BLOCKOUT
- T/W ℄ BIDIRECTIONAL LIGHT IN SHALLOW BASE CAN INSTALLED IN EXISTING CONCRETE
- T/W EDGE LIGHT (SEMIFLUSH)
- T/W CLEARANCE BAR
- T/W CLEARANCE BAR LIGHTS IN SHALLOW BASE CAN INSTALLED IN EXISTING CONCRETE
- L867 BASE WITH BLANK LID
- L868B BASE WITH BLANK LID
- T/WT/W ℄ OMNIDIRECTIONAL LIGHT
- T/WT/W ℄ OMNIDIRECTIONAL LIGHT IN SHALLOW BASE CAN INSTALLED IN EXISTING CONCRETE
- SIGN
- EXISTING JUNCTION CAN
- EXISTING JUNCTION CAN PLAZA 4 CANS
- EXISTING JUNCTION CAN PLAZA 6 CANS
- EXISTING JUNCTION CAN PLAZA 8 CANS
- EXISTING JUNCTION CAN PLAZA 10 CANS
- EXISTING MANHOLE/PULLBOX
- AIRCRAFT-RATED PULLBOX
- GROUND ROD
- 2" PVC CONDUIT CAP
- UGE — EXISTING CONDUIT DUCT
- 2" SCH 40 PVC
- 4W-4' DUCT BANK UNLESS OTHERWISE NOTED
- 2" SCH 40 PVC DRAIN
- 2" SCH 40 U.G. PVC WITH TYPE C 5KV NONSHIELDED W/ CROSS LINKED POLYETHYLENE INSULATION CONDUCTORS (CROSSBARS INDICATE NUMBER OF CONDUCTORS)

2-TAC1 — CIRCUIT IDENTIFICATION; NUMBER OF WIRES

MEMPHIS - SHELBY COUNTY AIRPORT AUTHORITY

MEMPHIS INTERNATIONAL AIRPORT
2491 WINCHESTER RD. SUITE 113
MEMPHIS, TENNESSEE
38116-3856

PROGRAM MANAGER
PARSONS
Program Management Consultant
Parsons Transportation Group Inc.
Project Office:
4225 Airways Blvd.
Memphis TN, 38116
JOB NO.

Allen&Hoshall
engineers-architects-surveyors
1661 INTERNATIONAL DRIVE
SUITE 100
MEMPHIS, TENNESSEE 38120
PHONE: 901-820-0820
FAX: 901-683-1001
JOB NO. 72198-B

ENGINEER-SUBCONSULTANT
POWERS HILL DESIGN
CIVIL ENGINEERING. CIVIL RESPONSIBILITY.
80 Monroe Avenue
Suite 420
Memphis, TN 38103
Tel: 901.543.8000
JOB NO.

DRAWN BY: RNP
CHECKED BY: HP
APPROVED BY: TG

MICHAEL S. COLLINS — REGISTERED ENGINEER — No. 104198 — STATE OF TENNESSEE — 3-17-25

ISSUED FOR BID

NO.	DESCRIPTION	DATE	BY

REVISIONS

PROJECT:

TAXIWAY BRAVO RECONFIGURATION (HOT SPOT 1)

SHEET TITLE:

LIGHTING PLAN LEGEND AND NOTES

MSCAA NO. 18-1413-02
DWG. FILE NAME E-LT-00.DWG
DATE 03/17/2025
DWG NO. E-LT-00
SCALE
SHEET NO. 56 of 73
FACILITY NO. NONE

Drawing name: \\AHMEMO3\72198-b\18-1413-02\DRAWINGS\E-LT-00.dwg 22x34 Mar 21, 2025 3:39pm by: jbarton

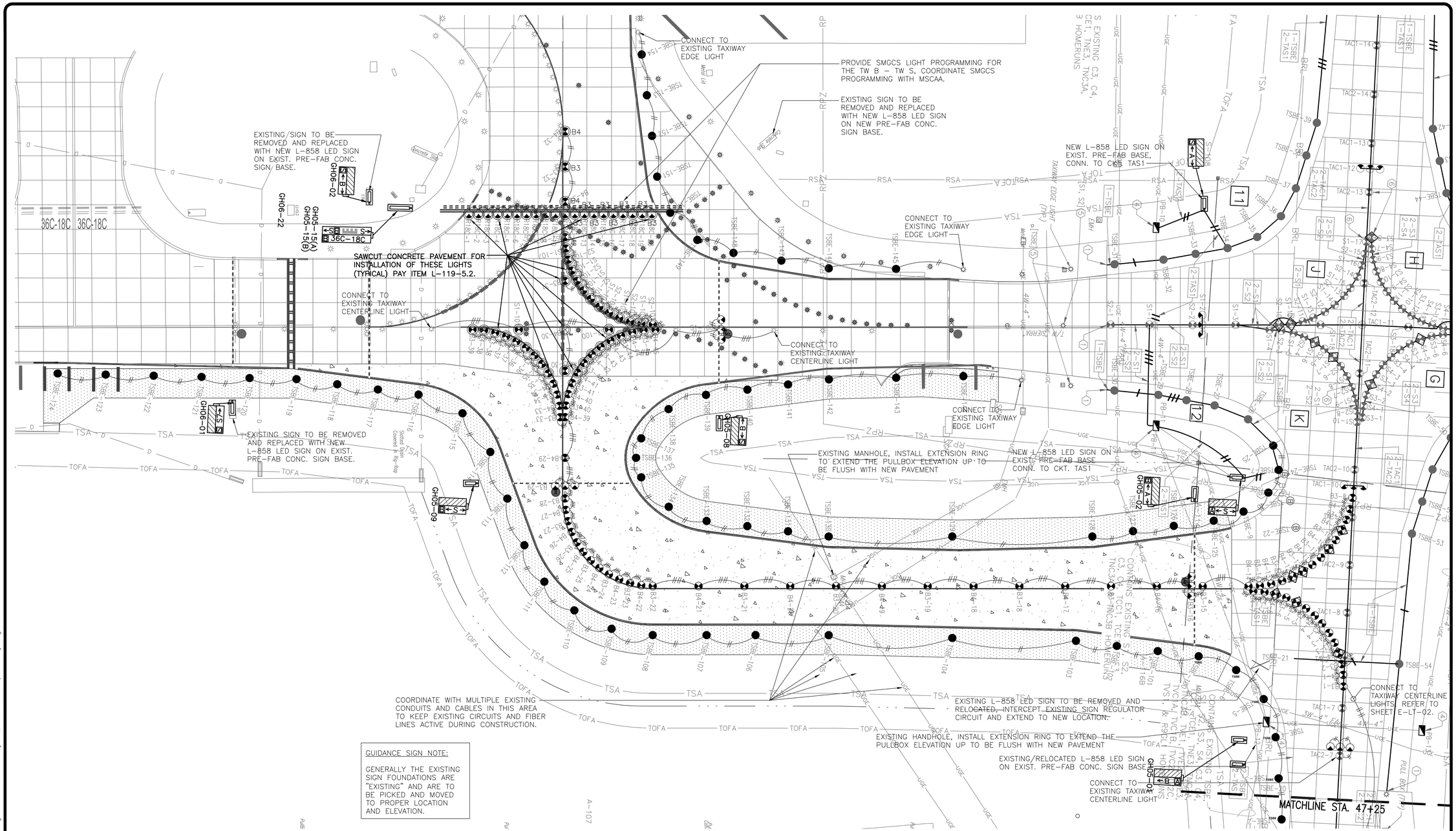

GUIDANCE SIGN NOTE:

GENERALLY THE EXISTING SIGN FOUNDATIONS ARE "EXISTING" AND ARE TO BE PICKED AND MOVED TO PROPER LOCATION AND ELEVATION.

NOTES

1. SEE SHEET E-LT-00 FOR LEGEND.
2. REFER TO SHEET E-DT-08 FOR LIGHTING FIXTURE COORDINATE LOCATIONS.

0' 25' 50' 100'

FULL SIZE SCALE: 1"=50'
HALF SIZE SCALE: 1"=100'

MEMPHIS - SHELBY COUNTY AIRPORT AUTHORITY

MEMPHIS INTERNATIONAL AIRPORT
2491 WINCHESTER RD. SUITE 113
MEMPHIS, TENNESSEE
38116-3856

PROGRAM MANAGER
PARSONS
Program Management Consultant
Parsons Transportation Group Inc.
Project Office:
4225 Airways Blvd.
Memphis TN, 38116
JOB NO.

Allen&Hoshall
engineers-architects-surveyors
1661 INTERNATIONAL DRIVE
SUITE 100
MEMPHIS, TENNESSEE 38120
PHONE: 901-820-0820
FAX: 901-683-1001
JOB NO. 72198-B

ENGINEER-SUBCONSULTANT
POWERS HILL DESIGN
CIVIL ENGINEERING. CIVIL RESPONSIBILITY.
80 Monroe Avenue
Suite 420
Memphis, TN 38103
Tel: 901.543.8000
JOB NO.

DRAWN BY: RNP
CHECKED BY: HP
APPROVED BY: TG

MICHAEL S. COLLINS
No. 104198
STATE OF TENNESSEE
3-17-25

ISSUED FOR BID

NO.	DESCRIPTION	DATE	BY

REVISIONS

PROJECT:

TAXIWAY BRAVO RECONFIGURATION (HOT SPOT 1)

SHEET TITLE:

LIGHTING PLAN STA. 10+50.00 TO STA. 19+50.00

MSCAA NO. 18-1413-02
DWG. FILE NAME E-LT-01.DWG
DATE 03/17/2025
DWG NO. E-LT-01
SCALE 1"=50'
SHEET NO. 57 of 73
FACILITY NO. NONE

Drawing name: L:\18-1413-02\DRAWINGS\E-LT-01.dwg E-LT-01 May 09, 2025 1:04pm by: tgibson

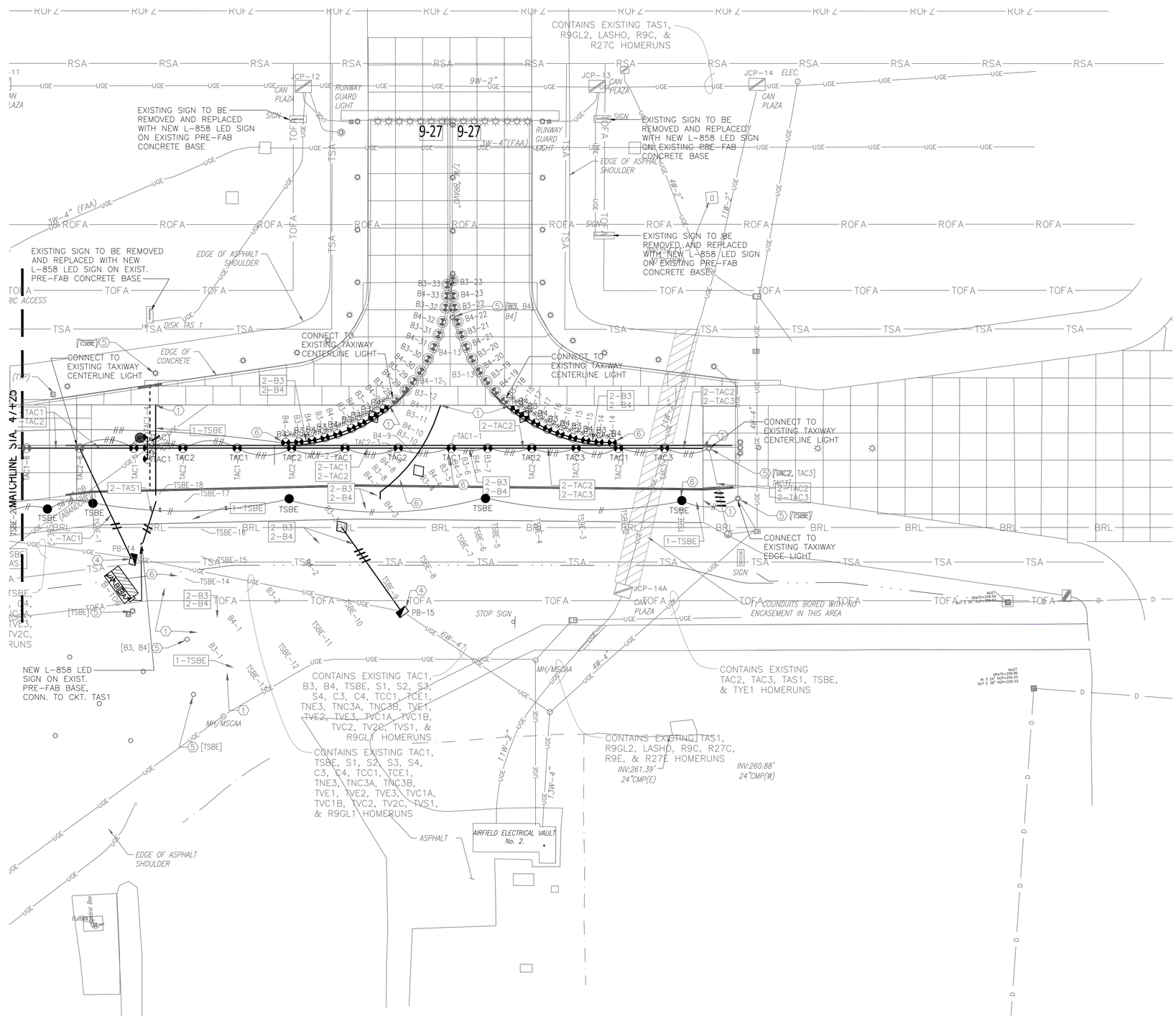

NOTES

1. SEE SHEET E-LT-00 FOR LEGEND.
2. REFER TO SHEET E-DT-08 FOR LIGHTING FIXTURE COORDINATE LOCATIONS.

0' 25' 50' 100'

FULL SIZE SCALE: 1"=50'
HALF SIZE SCALE: 1"=100'

MEMPHIS - SHELBY COUNTY AIRPORT AUTHORITY

MEMPHIS INTERNATIONAL AIRPORT
2491 WINCHESTER RD. SUITE 113
MEMPHIS, TENNESSEE
38116-3856

PROGRAM MANAGER
PARSONS
Program Management Consultant
Parsons Transportation Group Inc.
Project Office:
4225 Airways Blvd.
Memphis TN, 38116
JOB NO.

Allen&Hoshall
engineers-architects-surveyors
1661 INTERNATIONAL DRIVE
SUITE 100
MEMPHIS, TENNESSEE 38120
PHONE: 901-820-0820
FAX: 901-683-1001
JOB NO. 72198-B

ENGINEER-SUBCONSULTANT
POWERS HILL DESIGN
CIVIL ENGINEERING. CIVIL RESPONSIBILITY.
80 Monroe Avenue
Suite 420
Memphis, TN 38103
Tel: 901.543.8000
JOB NO.

DRAWN BY: RNP
CHECKED BY: HP
APPROVED BY: TG

MICHAEL S. COLLINS
REGISTERED ENGINEER
No. 114148
STATE OF TENNESSEE
3-17-25

ISSUED FOR BID

NO.	DESCRIPTION	DATE	BY

REVISIONS

PROJECT:
TAXIWAY BRAVO RECONFIGURATION (HOT SPOT 1)

SHEET TITLE:
LIGHTING PLAN TAXIWAY ALPHA STA. 47+25.00 TO STA. 53+50.00

MSCAA NO. 18-1413-02
DWG. FILE NAME E-LT-02.DWG
DATE 03/17/2025
DWG NO. E-LT-02
SCALE 1"=50'
SHEET NO. 58 of 73
FACILITY NO. NONE

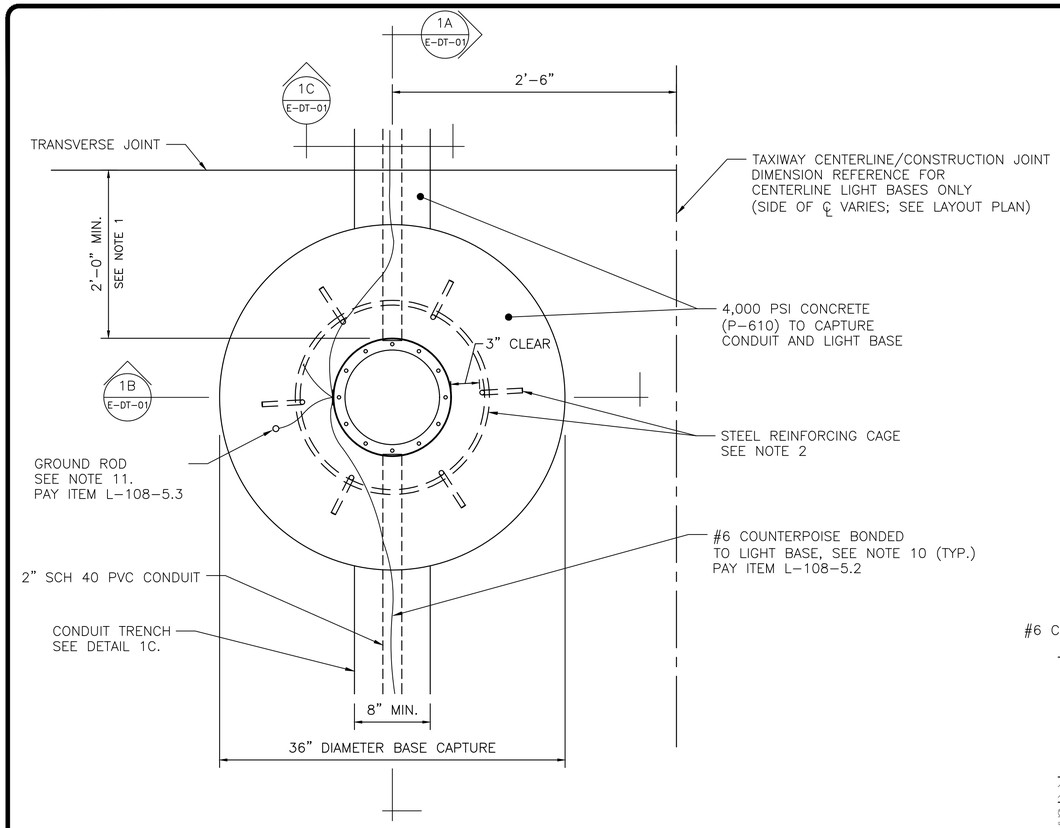

PLAN

1 E-DT-01 L-868 LIGHT BASE INSTALLATION IN NEW RIGID PAVEMENT

N.T.S. PAY ITEM L-125-5.9-1

INSTALLATION NOTES (NOTE #):

1. THE EDGE OF THE LIGHT BASE SHALL BE NO CLOSER THAN 2 FT TO ANY PAVEMENT JOINT.
2. STEEL REINFORCING CAGE CONSISTS OF #4 STEEL REBAR, ASTM GRADE A-184 OR A-704. SIX (6) VERTICAL BARS, EVENLY SPACED, IN A CIRCULAR PATTERN OFFSET 3" CLEAR OF LIGHT BASE. TOP OF VERTICAL BARS IS PLACED 3-INCHES BELOW THE PAVEMENT SURFACE AND EXTENDS TO EMBEDMENT IN THE CONCRETE BASE CAPTURE WITH 4-INCH 90-DEGREE BOTTOM HOOK. FOUR (4) HORIZONTAL BARS ENCIRCLE THE VERTICAL BARS BEGINNING AT THE 90-DEGREE HOOK AND EVENLY SPACED VERTICALLY (12" MAX. SPACING).
3. CORE DIMENSION SHALL BE L-868 TOP SECTION O.D. PLUS 1" MAXIMUM IN CONCRETE PAVEMENT. FINAL CORE POSITION SHALL BE CENTERED OVER THE BASE AND SHALL PROVIDE 1/2" MIN. TO 1" MAX. GAP BETWEEN L-868 TOP SECTION AND EDGE OF CONCRETE, AS INSTALLED.
4. L-868 BASE SECTION SHALL BE POSITIONED AT THE CORRECT ELEVATION TO ALLOW FOR THE SUBSEQUENT INSTALLATION OF THE TOP SECTION 1/8" TO 3/4" BELOW THE TOP OF PAVEMENT, AS MEASURED FROM THE TOP OF THE 1 3/8" MUD BAND.
5. INSTALL SPACER RINGS, AS NEEDED, BETWEEN THE CAPTURE SET LIGHT BASE AND THE TOP SECTION FOR ELEVATION ADJUSTMENT. FINAL ELEVATION OF THE TOP SECTION TO BE 1/8", +0 TO -1/16" TOLERANCE, MEASURED FROM THE TOP OF THE 1 3/8" MUD BAND ON THE LOW SIDE OF PAVEMENT. SUFFICIENT INVENTORY OF STANDARD SPACER RINGS (VARYING FROM 1/16" TO 3/4") SHALL BE ORDERED AHEAD AND AVAILABLE ON LOCATION TO ADJUST ALL OF THE LIGHT BASES WITHOUT DELAY TO CONSTRUCTION SCHEDULE. NO SEPARATE PAYMENT WILL BE MADE FOR EXCESS/UNUSED SPACER RINGS. STANDARD SPACER RINGS MAY BE RETURNABLE TO THE MANUFACTURER IF AGREEMENT IS MADE PRIOR TO ORDER.
6. NO MORE THAN 3 SPACER RINGS MAY BE USED ON ANY ONE LIGHT BASE INSTALLATION.
7. PROVIDE STAINLESS STEEL T304 BOLTS, THREADED FULL LENGTH, AS REQUIRED TO FASTEN THE EXTENSION TO THE BASE SECTION INCLUDING THE NECESSARY SPACER RING(S) WITH BOLT EXTENDING A MINIMUM 1/8" BELOW BOTTOM FLANGE AND NOT EXCEEDING 1" BELOW BOTTOM FLANGE AFTER FINAL TORQUE IS APPLIED.
8. SPACER RINGS SHALL BE JAQUITH #5411 SERIES, OR APPROVED EQUAL.
9. COUNTERPOISE CONDUCTOR SHALL BE INSTALLED ABOVE CONDUITS ALONG THE ENTIRE RUN AND SHALL CONNECT TO LIGHT BASES IN RIGID PAVEMENT. COUNTERPOISE SHALL BE BONDED TO REBAR CAGE AT EACH LIGHT BASE. COUNTERPOISE WIRE SHALL BE NO. 6 AWG, BARE SOLID COPPER WIRE. SPLICES IN COUNTERPOISE SHALL BE MINIMIZED.
10. INSTALL GROUND RODS (3/4" DIAMETER x 10' LONG) IN-LINE WITH THE COUNTERPOISE CONDUCTOR AT 500-FEET MAXIMUM SPACING AROUND THE ENTIRE CIRCUIT. COUNTERPOISE WIRE TO BE BONDED TO GROUND RODS BY EXOTHERMIC WELDS.
11. ONE (1) 5/8" x 8' GROUND ROD SHALL BE INSTALLED AT EACH LIGHT BASE AND BONDED TO THE LIGHT BASE WITH A #6 SOLID BARE COPPER GROUND (REFERENCE PAY ITEM L-108-5.3)
12. ALL GROUND CONNECTIONS SHALL BE INSPECTED BY PROGRAM MANAGER PRIOR TO CONCRETE CAPTURE.
13. ALL CONDUIT SHALL BE 2-INCH ELECTRICAL SCHEDULE 40 PVC, TYPE II.
14. ORIENTATION AND NUMBER OF HUBS REQUIRED ON LIGHT BASES VARY. CONTRACTOR SHALL ASSURE CORRECT LIGHT BASES ARE FURNISHED TO COMPLETE LIGHTING SYSTEM AS SHOWN ON LAYOUT PLAN SHEETS.
15. CONTRACTOR SHALL SUBMIT METHOD OF INSTALLATION FOR APPROVAL THAT PROVIDES STEP-BY-STEP SEQUENCE OF CONSTRUCTION INCLUDING, BUT NOT LIMITED TO, CORING AND TRENCHING, LIGHT BASE, CONDUIT, COUNTERPOISE, GROUNDING, REINFORCING CAGE, AND CONCRETE PLACEMENT.
16. PROVIDE ADDITIONAL CONCRETE REINFORCING FOR ALL LIGHT CAN BASES MOUNTED IN RIGID PAVEMENT, SEE DETAIL 3 THIS SHEET.

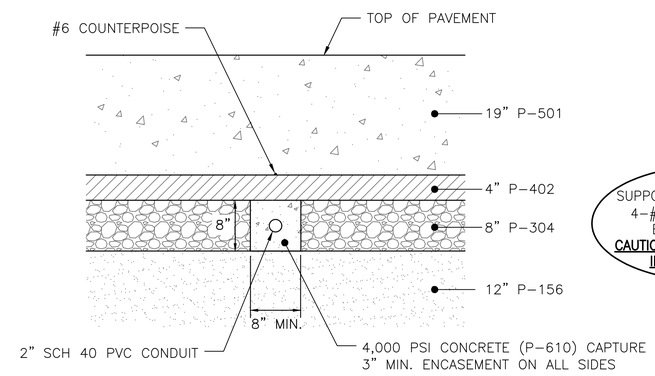

1C E-DT-01 CONDUIT TRENCH SECTION

N.T.S. PAY ITEM L-110-5.1

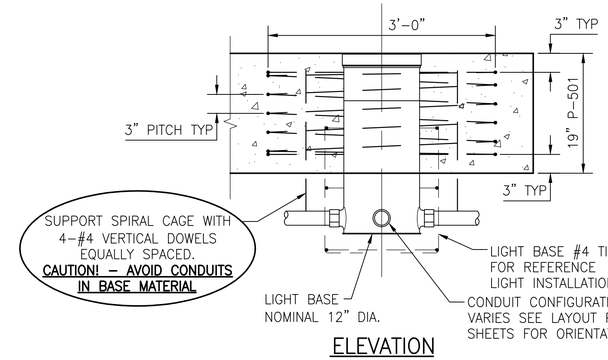

ELEVATION

3 E-DT-01 ADDITIONAL REINFORCING FOR ALL LIGHT BASES MOUNTED IN RIGID PAVEMENT

N.T.S.

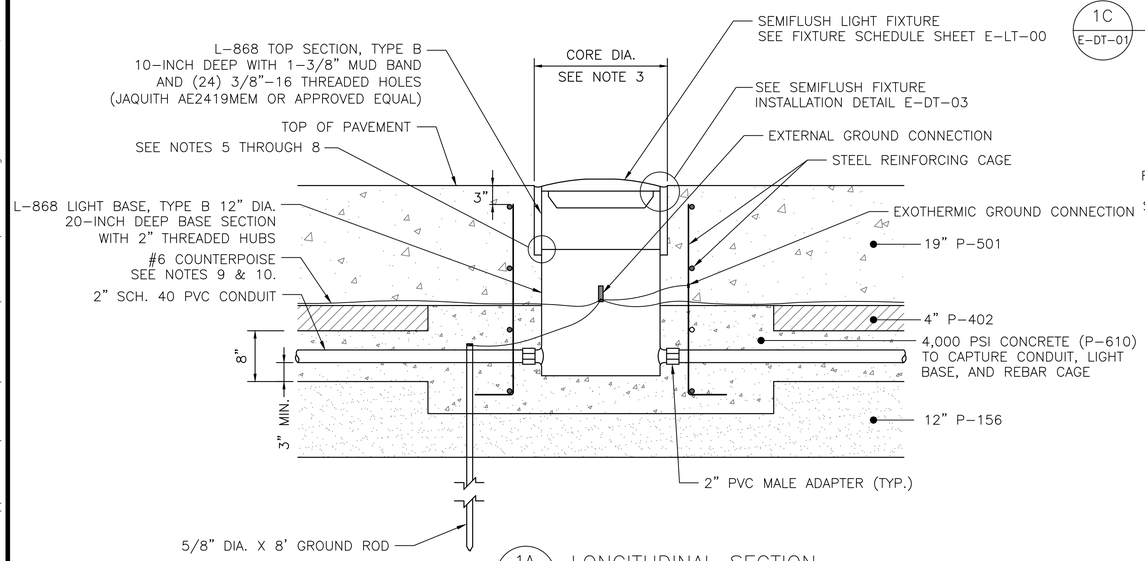

1A E-DT-01 LONGITUDINAL SECTION

N.T.S.

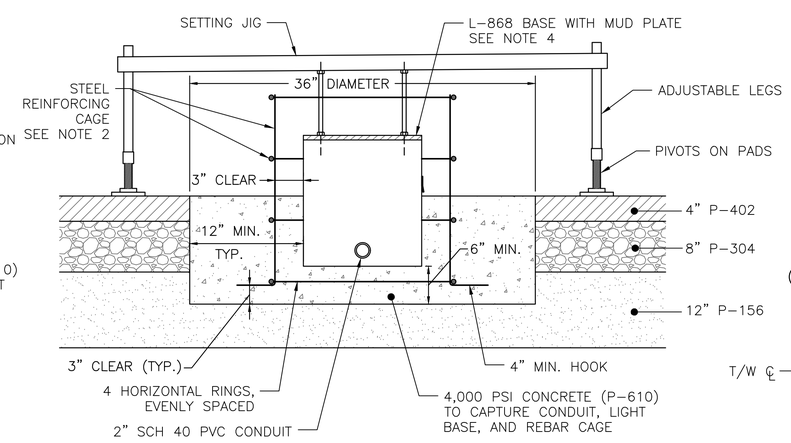

1B E-DT-01 BASE CAPTURE SECTION

N.T.S.

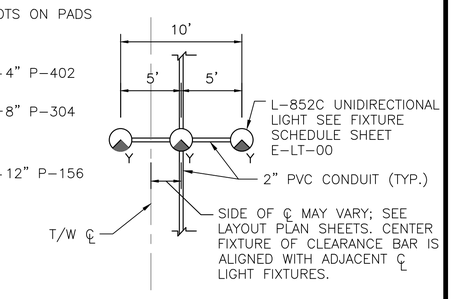

2 E-DT-01 TAXIWAY CLEARANCE LIGHT BAR LAYOUT

N.T.S. PAY ITEM L-125-5.2

MEMPHIS - SHELBY COUNTY AIRPORT AUTHORITY

MEMPHIS INTERNATIONAL AIRPORT
2491 WINCHESTER RD. SUITE 113
MEMPHIS, TENNESSEE
38116-3856

PROGRAM MANAGER
PARSONS
Program Management Consultant
Parsons Transportation Group Inc.
Project Office:
4225 Airways Blvd.
Memphis TN, 38116
JOB NO.

Allen&Hoshall
engineers-architects-surveyors
1661 INTERNATIONAL DRIVE
SUITE 100
MEMPHIS, TENNESSEE 38120
PHONE: 901-820-0820
FAX: 901-683-1001
JOB NO. 72198-B

ENGINEER-SUBCONSULTANT
POWERS HILL DESIGN
CIVIL ENGINEERING. CIVIL RESPONSIBILITY.
80 Monroe Avenue
Suite 420
Memphis, TN 38103
Tel: 901.543.8000
JOB NO.

DRAWN BY: ELA

CHECKED BY:

APPROVED BY:

MICHAEL S. COLLINS — STATE OF TENNESSEE

3-17-25

ISSUED FOR BID

NO.	DESCRIPTION	DATE	BY

REVISIONS

PROJECT:

TAXIWAY BRAVO RECONFIGURATION (HOT SPOT 1)

SHEET TITLE:

LIGHTING INSTALLATION DETAILS SHEET 1 OF 4

MSCAA NO. 18-1413-02

DWG. FILE NAME E-DT-01.DWG

DATE 03/17/2025

DWG NO. E-DT-01

SCALE N.T.S.

SHEET NO. 59 of 73

FACILITY NO. NONE

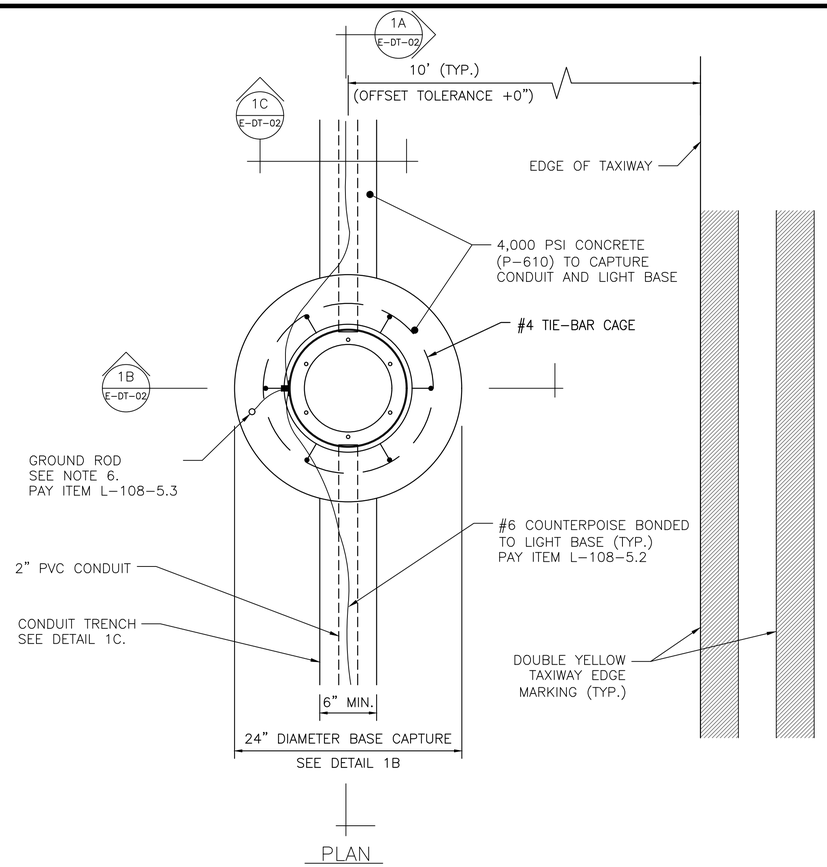

1 E-DT-02 L-867 LIGHT BASE INSTALLATION IN NEW FLEXIBLE PAVEMENT SHOULDER

N.T.S.

PAY ITEM L-125-5.9-2

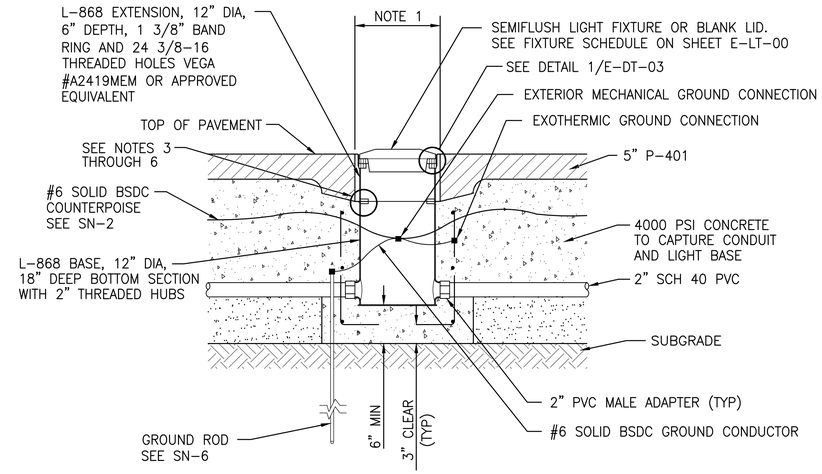

NOTES:

1. CORE EXTENSION O.D. + 1" MAXIMUM IN ASPHALT PAVEMENT.
2. THE BOTTOM 18" SECTION SHALL BE INSTALLED AT THE APPROPRIATE ELEVATION TO ALLOW FOR THE SUBSEQUENT INSTALLATION OF THE EXTENSION WITH THE BAND RING 1/8" TO 3/4" BELOW THE TOP OF PAVEMENT, AS MEASURED FROM THE TOP OF THE 1 3/8" BAND RING.
3. CONTRACTOR SHALL USE SPACER RINGS BETWEEN THE BOTTOM SECTION AND EXTENSION TO ADJUST THE TOP OF THE EXTENSION'S 1 3/8" BAND RING TO 1/8" BELOW THE TOP OF PAVEMENT (+0-1/16") MEASURED ON THE LOW SIDE OF PAVEMENT. CONTRACTOR SHALL PROVIDE ENOUGH SPACER RINGS WHEN ORDERING LIGHT BASES (AVAILABLE FROM 1/16" TO 1 15/16" IN 1/16" INCREMENTS) TO ADJUST ALL OF THE LIGHT BASES IN A TIMELY MANNER. STANDARD SPACER RINGS FROM 1/16" TO 3/4" MAY BE RETURNABLE TO THE MANUFACTURER IF AGREEMENT IS MADE PRIOR TO ORDER.
4. CONTRACTOR SHALL NOT USE MORE THAN 3 SPACER RINGS ON ANY ONE LIGHT BASE INSTALLATION.
5. CONTRACTOR SHALL PROVIDE STAINLESS STEEL T304 BOLTS THREADED FULL LENGTH AS REQUIRED TO FASTEN THE EXTENSIONS TO THE BOTTOM SECTIONS INCLUDING REQUIRED SPACER RINGS WITH BOLT EXTENDING A MINIMUM 1/8" BELOW BOTTOM FLANGE AND NOT TO EXCEED 1" BELOW BOTTOM FLANGE AFTER FINAL TORQUE HAS BEEN APPLIED.
6. SPACER RINGS SHALL BE JAQUITH.

1A E-DT-02 OVERALL SECTION

N.T.S.

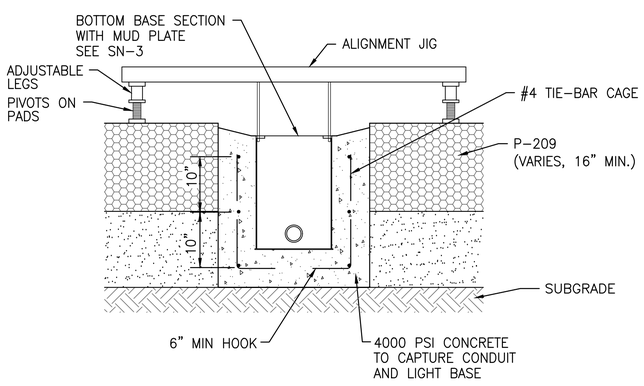

1B E-DT-02 CAPTURE SECTION

N.T.S.

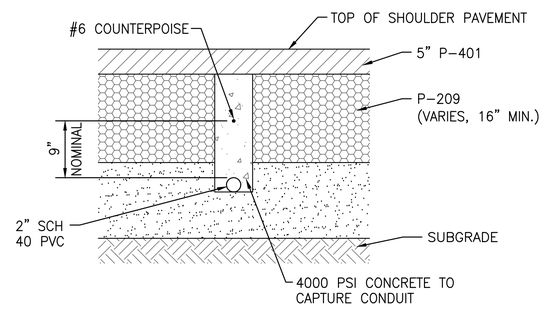

1C E-DT-02 CONDUIT SECTION

N.T.S. PAY ITEM L-110-5.2

SHEET NOTES (SN-#):

1. COUNTERPOISE WIRE SHALL BE NO. 6 AWG, SOLID, BARE COPPER WIRE. SPLICES IN COUNTERPOISE SHALL BE MINIMIZED.
2. COUNTERPOISE SHALL CONNECT TO LIGHT BASES UNDER PAVED SHOULDER.
3. TOP OF 1/8" MUD PLATE SHALL BE 6" MINIMUM BELOW THEORETICAL TOP OF PAVEMENT TO ALLOW FOR THE SUBSEQUENT INSTALLATION OF THE L-868 EXTENSION.
4. LIGHT BASES SHALL CONFORM TO FAA ADVISORY CIRCULAR 150/5345-42F, SPECIFICATION FOR AIRPORT LIGHT BASES AND TRANSFORMER HOUSINGS.
5. ORIENTATION AND NUMBER OF HUBS REQUIRED ON LIGHT BASES VARY. SEE LAYOUT PLAN SHEETS FOR DETAILS.
6. ONE 5/8" X 8' GROUND ROD SHALL BE INSTALLED AT EACH LIGHT BASE AND BONDED TO THE LIGHT BASE AND REBAR CAGE WITH A #6 SOLID BSDC GROUND (REF PAY ITEM L-108-5.3).
7. ALL GROUND CONNECTIONS SHALL BE INSPECTED BY PROGRAM MANAGER PRIOR TO PLACEMENT OF CONCRETE.
8. ALL CONDUIT SHALL BE 2" ELECTRICAL SCH 40 PVC, TYPE II.
9. CONTRACTOR SHALL SUBMIT METHOD OF INSTALLATION FOR APPROVAL THAT PROVIDES STEP-BY-STEP SEQUENCE OF OPERATIONS INCLUDING, BUT NOT LIMITED TO, CORING AND TRENCHING, LIGHT BASE, CONDUIT, COUNTERPOISE, GROUNDING, TIE-BAR CAGE AND CONCRETE PLACEMENT.

MEMPHIS - SHELBY COUNTY AIRPORT AUTHORITY

MEMPHIS INTERNATIONAL AIRPORT
2491 WINCHESTER RD. SUITE 113
MEMPHIS, TENNESSEE
38116-3856

PROGRAM MANAGER
PARSONS
Program Management Consultant
Parsons Transportation Group Inc.
Project Office:
4225 Airways Blvd.
Memphis TN, 38116
JOB NO.

Allen&Hoshall
engineers-architects-surveyors
1661 INTERNATIONAL DRIVE
SUITE 100
MEMPHIS, TENNESSEE 38120
PHONE: 901-820-0820
FAX: 901-683-1001
JOB NO. 72198-B

ENGINEER-SUBCONSULTANT
POWERS HILL DESIGN
CIVIL ENGINEERING. CIVIL RESPONSIBILITY.
80 Monroe Avenue
Suite 420
Memphis, TN 38103
Tel: 901.543.8000
JOB NO.

DRAWN BY: ELA

CHECKED BY:

APPROVED BY:

MICHAEL S. COLLINS — REGISTERED ENGINEER — No. 104198 — STATE OF TENNESSEE — 3-17-25

ISSUED FOR BID

NO.	DESCRIPTION	DATE	BY

REVISIONS

PROJECT:

TAXIWAY BRAVO RECONFIGURATION (HOT SPOT 1)

SHEET TITLE:

LIGHTING INSTALLATION DETAILS SHEET 2 OF 4

MSCAA NO. 18-1413-02

DWG. FILE NAME E-DT-02.DWG

DATE 03/17/2025

DWG NO. E-DT-02

SCALE N.T.S.

SHEET NO. 60 of 73

FACILITY NO. NONE

Drawing name: \\AHMEMO3\72198-b\18-1413-02\DRAWINGS\E-DT-02.dwg 22x34 Mar 21, 2025 3:49pm by: jbarton

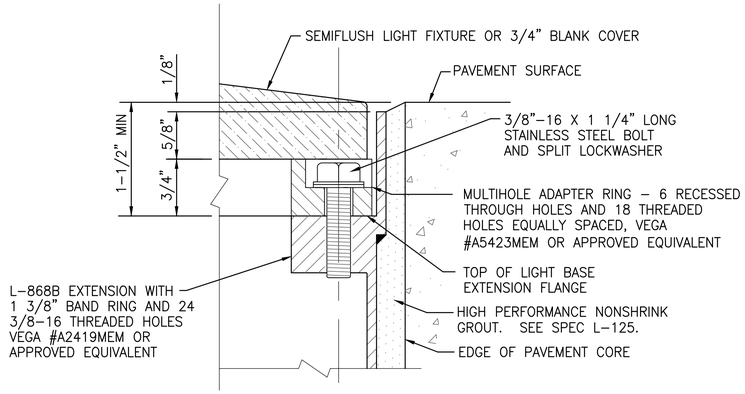

MULTIHOLE ADAPTER RING MOUNTING HARDWARE

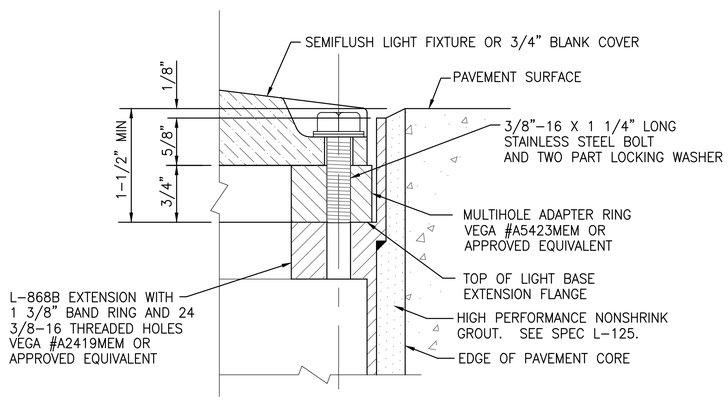

FIXTURE MOUNTING HARDWARE

NOTES:

1. BOLTS SHALL BE LENGTH SPECIFIED ABOVE UNLESS OTHERWISE APPROVED BY DESIGN ENGINEER.
2. STANDARD BAND RING EXTENDS 1 3/8" ABOVE TOP OF UPPER BASE SECTION TO ALLOW 3/4" FIXTURE RECESS AND 3/4" MULTIHOLE ADAPTER RING. TOP OF FLANGE RING BAND IS 1/8" BELOW PAVEMENT SURFACE.
3. TORQUE BOLTS HOLDING FIXTURE OR BLANK LID TO 180 INCH-POUNDS. TORQUE REMAINING BOLTS HOLDING ADAPTER RING AND EXTENSION RING TO MANUFACTURER'S SPECIFICATIONS.
4. BLANK LIDS FOR L-868 BASES IN RIGID PAVEMENT SHALL BE 3/4" THICK (OLSON INC. #128T 3/4").
5. ALL BOLT THREADS SHALL BE COATED WITH SILICONE ANTI-SEIZE COMPOUND BEFORE INSERTION OF BOLT.
6. ALL LIGHT BASE BOLTS SHALL BE PROVIDED WITH STAINLESS STEEL SPLIT LOCK TWO PIECE WASHERS OR APPROVED EQUIVALENT.

1 E-DT-03 TAXIWAY CENTERLINE SEMIFLUSH FIXTURE INSTALLATION DETAIL
N.T.S.

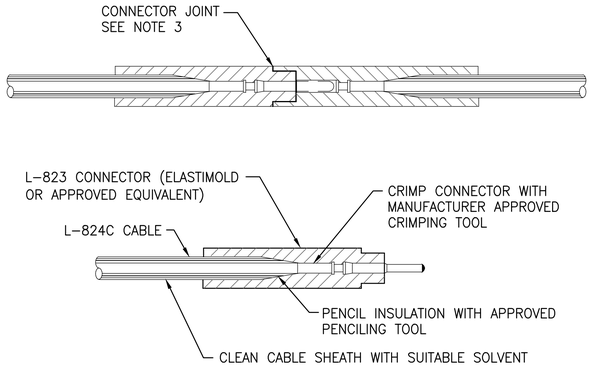

PLUG CONNECTED TO CABLE

NOTES:

1. CONTRACTOR SHALL PROVIDE CABLE CIRCUIT IDENTIFICATION MARKERS ATTACHED TO BOTH SIDES OF EACH CABLE CONNECTION.
2. CABLE IDENTIFICATION MARKERS SHALL BE T&B TY-RAP #TY546MT OR APPROVED EQUIVALENT.
3. CONTRACTOR SHALL PROVIDE 1 LAYER OF SCOTCH #23 HIGH VOLTAGE TAPE HALF LAPPED AND 1 LAYER OF SCOTCH #33 VINYL PLASTIC TAPE HALF LAPPED (4 THICKNESS' AT ANY POINT) ACROSS CONNECTOR JOINT. TAPE SHALL EXTEND A MINIMUM OF 1.5" EITHER SIDE OF THE CONNECTOR JOINT.

2 E-DT-03 SPLICE AND CONNECTOR DETAIL
N.T.S.

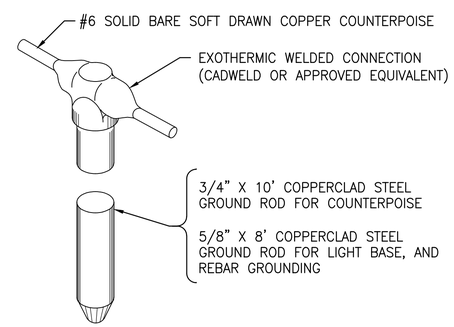

NOTES:

1. GROUND RODS SHALL BE INSTALLED NOT MORE THAN 500 FEET APART FOR COUNTERPOISE AND AS SHOWN ON LAYOUT PLAN SHEETS.
2. ONE GROUND ROD SHALL BE INSTALLED AT EACH LIGHT BASE FOR GROUNDING THE LIGHT BASE AND ASSOCIATED STEEL REINFORCEMENT.

3 E-DT-03 TYPICAL GROUND ROD CONNECTION
N.T.S. PAY ITEMS L-108-5.2 & L-108-5.3

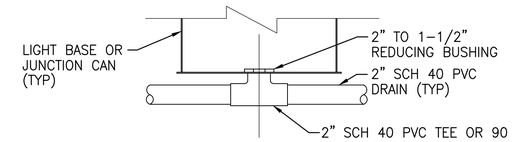

NOTES:

1. SEE LIGHTING LAYOUT SHEETS FOR LOCATION OF DRAIN CONDUITS.
2. SLOPE DRAIN CONDUITS 1.0% TYPICAL (0.5% MINIMUM) TOWARD DRAINAGE STRUCTURES.
3. PENETRATE INLET/MANHOLE WITH DRAIN CONDUIT ABOVE STORM SEWER PIPES WHERE POSSIBLE WHILE MAINTAINING SLOPE REQUIREMENT.
4. SEAL ENTRY AROUND DRAIN CONDUIT AT THE INLET/ MANHOLE WITH COMPATIBLE NONSHRINK GROUT.
5. DRAINHOLES IN BOTTOM OF BASES (L-867 & L-868) SHALL BE FACTORY FABRICATED PRIOR TO HOT DIP GALVANIZING.

4 E-DT-03 DRAINS FOR JUNCTION CANS AND LIGHT BASES
N.T.S. PAY ITEM L-110-5.4

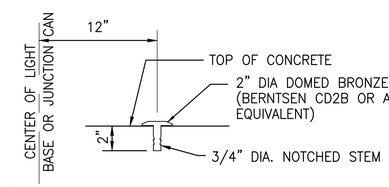

NOTES:

1. IDENTIFICATION SHALL BE STAMPED USING 1/4" FIGURES AND LETTERS UNIFORMLY SPACED ON THE BRONZE MARKER.
2. IDENTIFICATION MARKERS SHALL BE UNIFORMLY INSTALLED ADJACENT TO RUNWAY AND TAXIWAY ELEVATED EDGE LIGHTS. PREFERRED LOCATION IS ON A LINE PERPENDICULAR TO TAXIWAY CENTERLINE, INBOARD OF LIGHT FIXTURE.

5 E-DT-03 IDENTIFICATION MARKER
N.T.S.

MEMPHIS - SHELBY COUNTY AIRPORT AUTHORITY
MEMPHIS INTERNATIONAL AIRPORT
2491 WINCHESTER RD. SUITE 113
MEMPHIS, TENNESSEE
38116-3856

PROGRAM MANAGER
PARSONS
Program Management Consultant
Parsons Transportation Group Inc.
Project Office:
4225 Airways Blvd.
Memphis TN, 38116
JOB NO.

Allen&Hoshall
engineers-architects-surveyors
1661 INTERNATIONAL DRIVE
SUITE 100
MEMPHIS, TENNESSEE 38120
PHONE: 901-820-0820
FAX: 901-683-1001
JOB NO. 72198-B

ENGINEER-SUBCONSULTANT
POWERS HILL DESIGN
CIVIL ENGINEERING. CIVIL RESPONSIBILITY.
80 Monroe Avenue
Suite 420
Memphis, TN 38103
Tel: 901.543.8000
JOB NO.

DRAWN BY: ELA
CHECKED BY:
APPROVED BY:

MICHAEL S. COLLINS REGISTERED ENGINEER No. 114198 STATE OF TENNESSEE 3-17-25

ISSUED FOR BID

NO.	DESCRIPTION	DATE	BY

REVISIONS

PROJECT:
TAXIWAY BRAVO RECONFIGURATION (HOT SPOT 1)

SHEET TITLE:
LIGHTING INSTALLATION DETAILS SHEET 3 OF 4

MSCAA NO. 18-1413-02
DWG. FILE NAME E-DT-03.DWG
DATE 03/17/2025
DWG NO. E-DT-03
SCALE N.T.S.
SHEET NO. 61 of 73
FACILITY NO. NONE

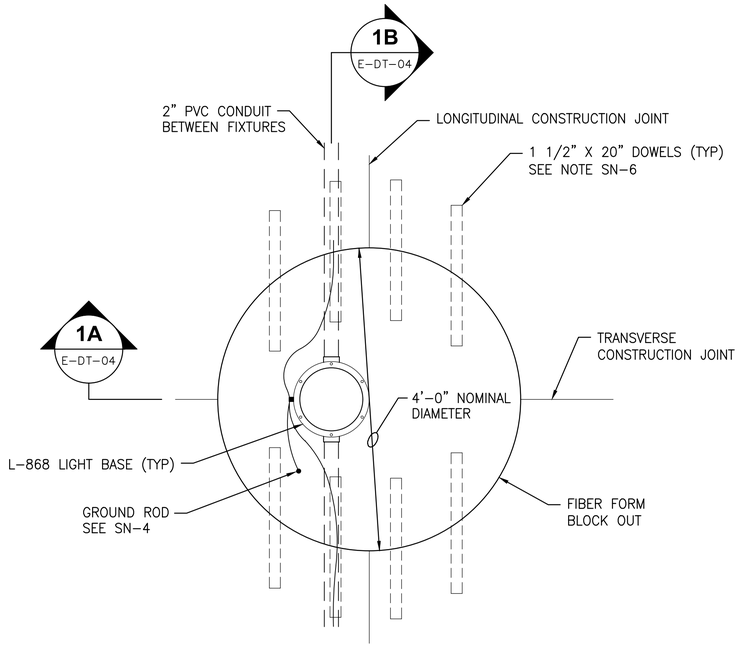

PLAN

1 / E-DT-04 LIGHT BASE BLOCK OUT AT LOCATIONS CLOSER THAN 2' FROM PAVEMENT JOINTS
N.T.S.

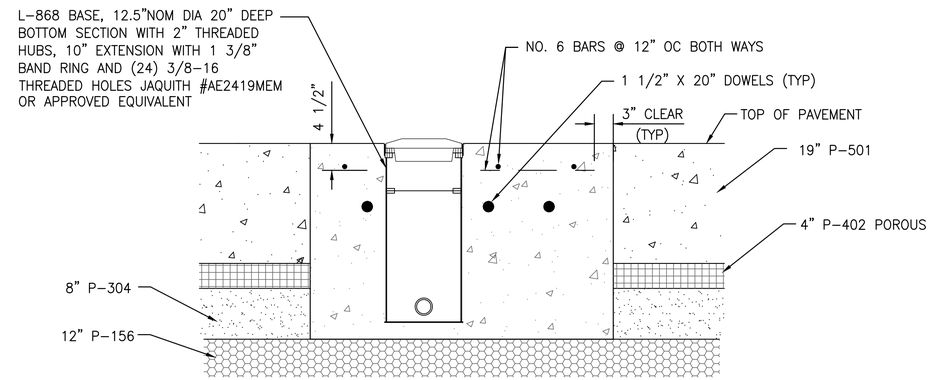

1A / E-DT-04 TRANSVERSE SECTION
N.T.S.

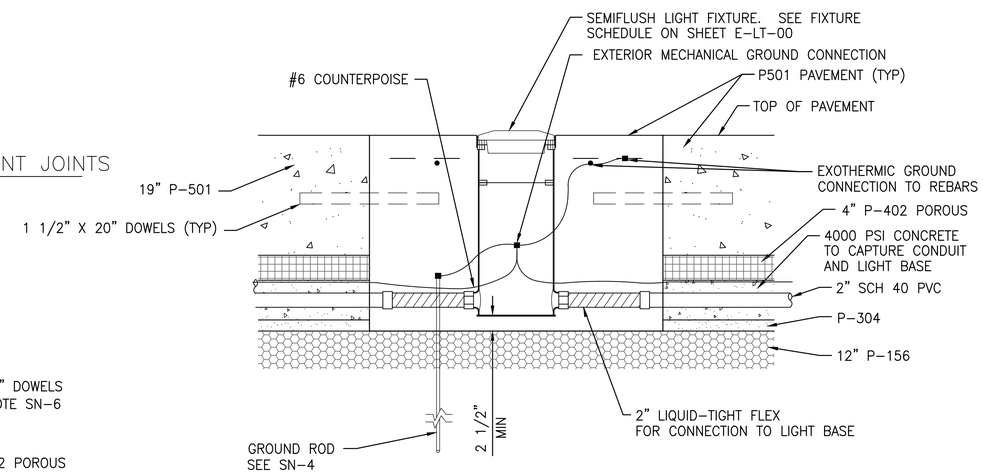

1B / E-DT-04 LONGITUDINAL SECTION
N.T.S.

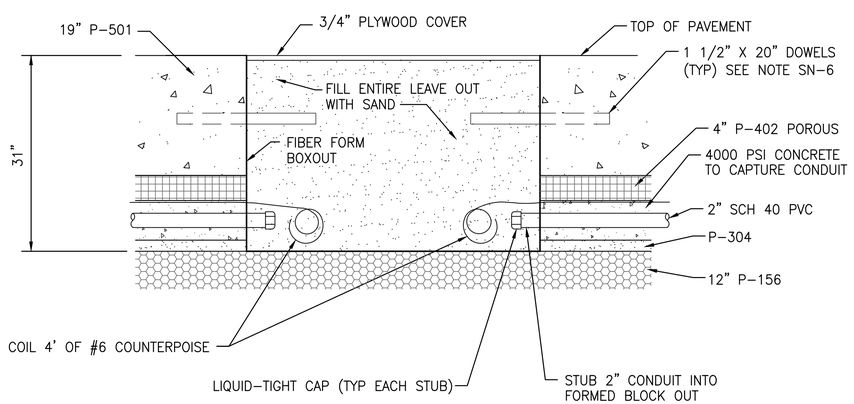

BLOCK OUT USED ONLY WHEN LIGHT BASES ARE CLOSER THAN 2' TO PAVEMENT JOINTS.

2 / E-DT-04 LIGHT BASE BLOCK OUT DETAIL
N.T.S.
PAY ITEM L-125-5.26

SHEET NOTES (SN-#):

1. COUNTERPOISE WIRE SHALL BE NO. 6 AWG, BARE SOLID COPPER WIRE. SPLICES IN COUNTERPOISE SHALL BE MINIMIZED.
2. LIGHT BASES SHALL CONFORM TO FAA ADVISORY CIRCULAR 150/5345-42J, SPECIFICATION FOR AIRPORT LIGHT BASES AND TRANSFORMER HOUSINGS.
3. ORIENTATION AND NUMBER OF HUBS REQUIRED ON LIGHT BASES VARY. SEE LAYOUT PLAN SHEETS FOR DETAILS.
4. ONE 5/8" X 8' GROUND ROD SHALL BE INSTALLED AT EACH LIGHT BASE AND BONDED TO THE LIGHT BASE AND SLAB REINFORCING WITH A #6 SOLID BSDC GROUND (REF PAY ITEM L-108-5.3).
5. ALL GROUND CONNECTIONS SHALL BE INSPECTED BY RESIDENT PROJECT REPRESENTATIVE PRIOR TO PLACEMENT OF CONCRETE.
6. SECURE DOWEL BARS IN PLACE TO PREVENT ROTATION OR MISALIGNMENT DURING PLACEMENT OF SURROUNDING CONCRETE.
7. EXPECTED LIGHT BASE BLOCK OUT LOCATIONS ARE IDENTIFIED ON THE LIGHTING COORDINATE SCHEDULES SHEETS E-DT-08 & E-DT-09.
8. CONTRACTOR SHALL SUBMIT METHOD OF INSTALLATION FOR APPROVAL THAT PROVIDES STEP-BY-STEP SEQUENCE OF OPERATIONS INCLUDING, BUT NOT LIMITED TO, PAVEMENT BLOCK OUT, LIGHT BASE, CONDUIT, COUNTERPOISE, DOWEL, REINFORCEMENT, AND CONCRETE PLACEMENT.

MEMPHIS - SHELBY COUNTY AIRPORT AUTHORITY
MEMPHIS INTERNATIONAL AIRPORT
2491 WINCHESTER RD. SUITE 113
MEMPHIS, TENNESSEE
38116-3856

PROGRAM MANAGER
PARSONS
Program Management Consultant
Parsons Transportation Group Inc.
Project Office:
4225 Airways Blvd.
Memphis TN, 38116
JOB NO.

Allen&Hoshall
engineers-architects-surveyors
1661 INTERNATIONAL DRIVE
SUITE 100
MEMPHIS, TENNESSEE 38120
PHONE: 901-820-0820
FAX: 901-683-1001
JOB NO. 72198-B

ENGINEER-SUBCONSULTANT
POWERS HILL DESIGN
CIVIL ENGINEERING. CIVIL RESPONSIBILITY.
80 Monroe Avenue
Suite 420
Memphis, TN 38103
Tel: 901.543.8000
JOB NO.

DRAWN BY: ELA
CHECKED BY:
APPROVED BY:

MICHAEL S. COLLINS — Registered Engineer — No. 104198 — STATE OF TENNESSEE — 3-17-25

ISSUED FOR BID

NO.	DESCRIPTION	DATE	BY

REVISIONS

PROJECT:
TAXIWAY BRAVO RECONFIGURATION (HOT SPOT 1)

SHEET TITLE:
LIGHTING INSTALLATION BLOCK OUT DETAIL SHEET 4 OF 4

MSCAA NO. 18-1413-02
DWG. FILE NAME E-DT-04.DWG
DATE 03/17/2025
DWG NO. E-DT-04
SCALE N.T.S.
SHEET NO. 62 of 73
FACILITY NO. NONE

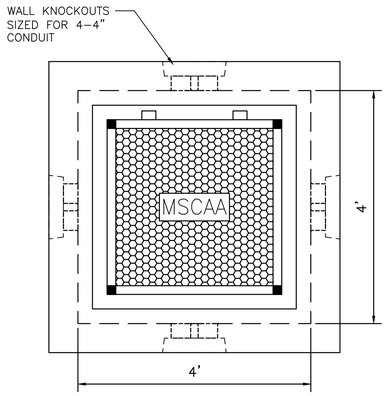

PLAN VIEW

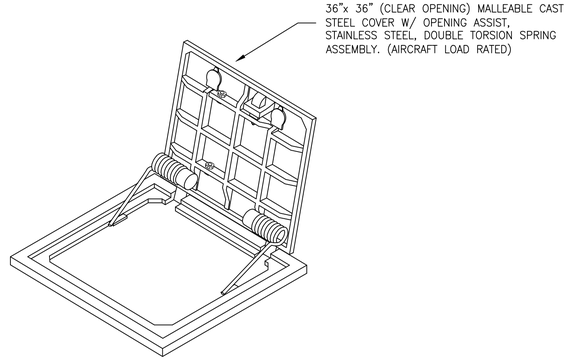

LID ISOMETRIC VIEW

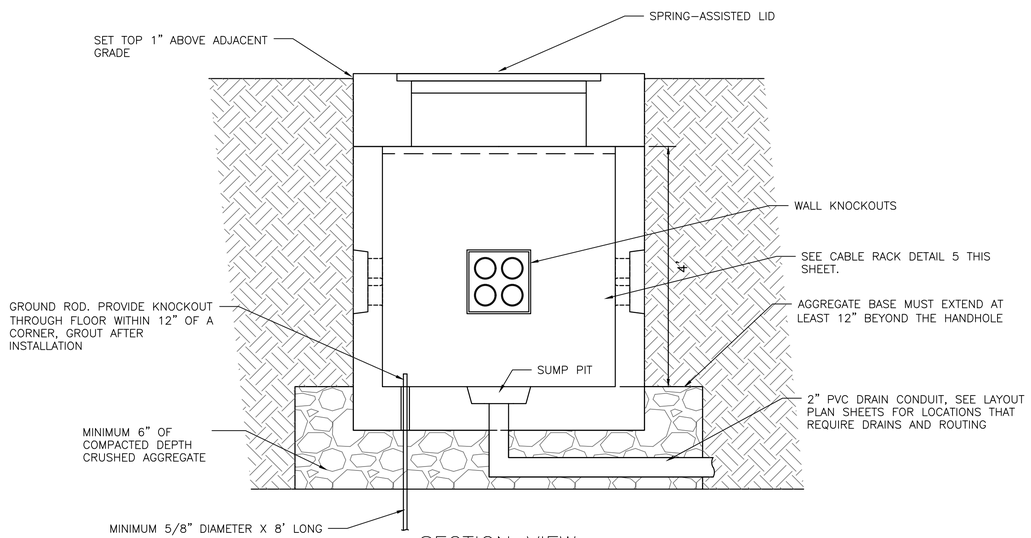

SECTION VIEW

NOTES:

1. PULLBOX SHALL BE AIRCRAFT RATED 4'X4'X4' INTERIOR DIMENSIONS WITH AIRCRAFT RATED SPRING ASSISTED ACCESS COVER WITH SECURITY BOLTING PROVISION, SUMP PIT, CABLE RACKS AND ARMS TO FORM THREE LEVELS OF RACKS AROUND INSIDE OF PULLBOX 12", 24" AND 36" ABOVE FLOOR LEVEL, KNOCKOUTS FOR 4W–4" DUCT BANK ON ALL SIDES, AND PULLING EYES.
2. CONDUITS STUBBED INTO PULLBOX SHALL BE SEALED WITH A WATERPROOF GROUT AND WATER/VERMIN–PROOF MASTIC.
3. COUNTERPOISE SHALL PASS THROUGH THE PULLBOX ADJACENT TO THE CONDUITS AND CONNECT TO ONE GROUND ROD WHICH PENETRATES THE FLOOR WITHIN 12" OF A CORNER. LEAVE 6" OF GROUND ROD EXPOSED ABOVE FLOOR LEVEL FOR CONNECTIONS.
4. MINIMUM EXCAVATION IS 5'–4" WIDE, 5'–4" LONG; DEPTH AS REQUIRED TO ENSURE A 6" LEVELED COMPACTED AGGREGATE BASE. PULLBOX TO BE BACKFILLED WITH CEMENT STABILIZED SAND OR P–153.
5. SEAL JOINTS BETWEEN PULLBOX SECTIONS WITH MANUFACTURER RECOMMENDED BUTYL RESIN.
6. CONTRACTOR SHALL CAP ALL CONDUIT BELL END TERMINATORS WITH FACTORY FABRICATED PLASTIC PLUGS OF PROPER SIZE.
7. ALL MATERIALS AND ASSOCIATED HARDWARE IN THE PULLBOXES SHALL BE NON–CORROSIVE MATERIALS.
8. CONTRACTOR SHALL GRADE AROUND PULLBOXES AS NECESSARY TO PREVENT SILT/DIRT INFILTRATION INTO PULLBOXES.
9. PROVIDE 6" COMPACTED DEPTH OF CRUSHED AGGREGATE BEDDING UNDER PULLBOXES.
10. PULLBOX COVERS SHALL BE LABELED "MSCAA".

1 — AIRCRAFT-RATED PULLBOX
E–DT–05 PAY ITEM L–115–5.1 N.T.S.

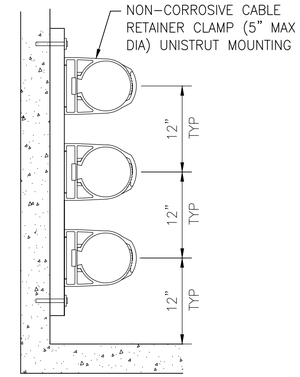

NOTE: CONTRACTOR SHALL PROVIDE 2 RACKS PER WALL.

5 — TYPICAL CABLE RACK
E–DT–05 N.T.S.

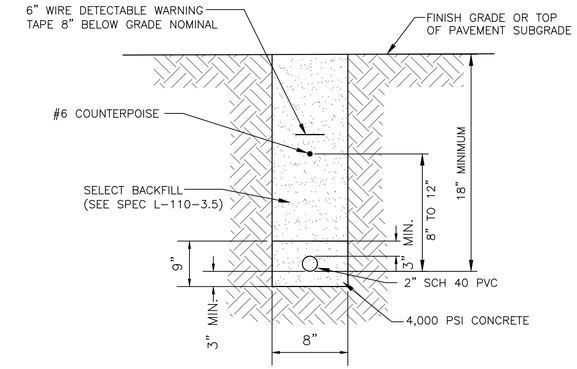

2 — 1-WAY 2-INCH DUCT
E–DT–05 PAY ITEM L–110–5.3 N.T.S.

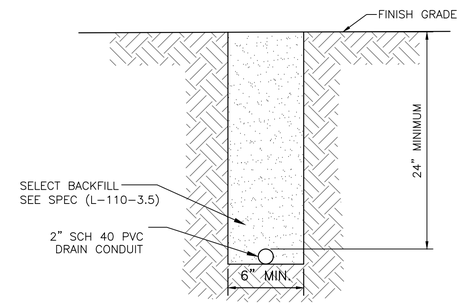

NOTE: SLOPE DRAIN 1% MINIMUM

(REFERENCE PAY ITEM L–110–5.4)

3 — DEB DRAIN CONDUIT
E–DT–05 PAY ITEM L–110–5.4 N.T.S.

NOTES:

1. CONDUITS MAY BE SPACED VERTICALLY OR HORIZONTALLY. SPACING BETWEEN CONDUITS SHALL BE 2" MINIMUM WITH A 3" THICKNESS OF CONCRETE SURROUNDING THE GROUP OF CONDUITS AS SHOWN.
2. WHERE 2 OR MORE CONDUITS ARE INSTALLED IN ONE TRENCH, CONTRACTOR SHALL PROVIDE PLASTIC CONDUIT SPACERS AT 5' OC LONGITUDINALLY TO ENSURE UNIFORM SPACING BETWEEN CONDUITS. SPACERS SHALL BE SECURED IN TRENCH TO PREVENT MISALIGNMENT.
3. COUPLINGS OF ADJACENT CONDUITS SHALL BE STAGGERED A MINIMUM OF 12" APART FOR CONDUITS 2" DIAMETER OR SMALLER AND 24" APART FOR CONDUITS LARGER THAN 2" DIAMETER.
4. ALL EMPTY DUCTS OVER 15' IN LENGTH INSTALLED BY THE CONTRACTOR SHALL BE PROVIDED WITH A 200 LB. TENSILE STRENGTH POLYPROPYLENE PULL ROPE.
5. CONDUITS MAY BE PLACED IN A SINGLE LAYER WHEN NECESSARY TO MEET VERTICAL CLEARANCES.
6. BACKFILL SHALL BE P–153 WHERE BELOW PAVEMENT.

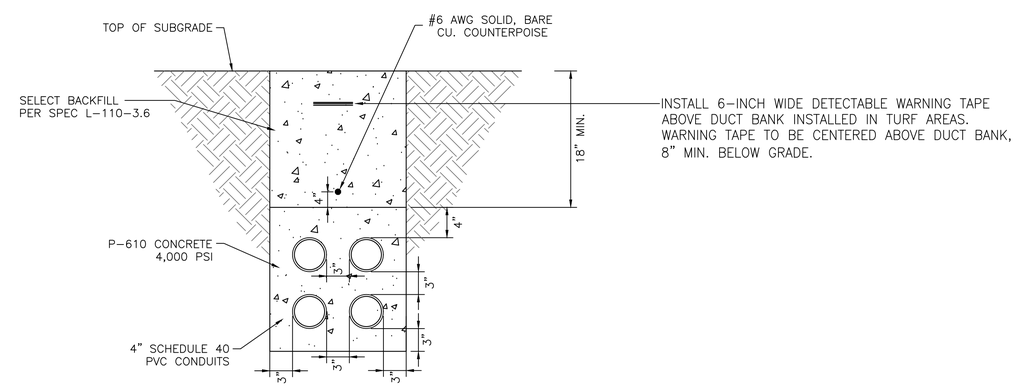

4 — 4-WAY 4-INCH CONCRETE ENCASED DUCT BANK
E–DT–05 PAY ITEM L–110–5.5 N.T.S.

MEMPHIS - SHELBY COUNTY AIRPORT AUTHORITY
MEMPHIS INTERNATIONAL AIRPORT
2491 WINCHESTER RD. SUITE 113
MEMPHIS, TENNESSEE
38116–3856

PROGRAM MANAGER
PARSONS
Program Management Consultant
Parsons Transportation Group Inc.
Project Office:
4225 Airways Blvd.
Memphis TN, 38116
JOB NO.

Allen&Hoshall
engineers-architects-surveyors
1661 INTERNATIONAL DRIVE
SUITE 100
MEMPHIS, TENNESSEE 38120
PHONE: 901–820–0820
FAX: 901–683–1001
JOB NO. 72198-B

ENGINEER–SUBCONSULTANT
POWERS HILL DESIGN
CIVIL ENGINEERING. CIVIL RESPONSIBILITY.
80 Monroe Avenue
Suite 420
Memphis, TN 38103
Tel: 901.543.8000
JOB NO.

DRAWN BY: ELA
CHECKED BY:
APPROVED BY:

MICHAEL S. COLLINS — REGISTERED ENGINEER — No. 104198 — STATE OF TENNESSEE — 3-17-25

ISSUED FOR BID

NO.	DESCRIPTION	DATE	BY

REVISIONS

PROJECT:
TAXIWAY BRAVO RECONFIGURATION (HOT SPOT 1)

SHEET TITLE:
ELECTRICAL DETAILS

MSCAA NO. 18-1413-02
DWG. FILE NAME E-DT-05.DWG
DATE 03/17/2025
DWG NO. E-DT-05
SCALE N.T.S.
SHEET NO. 63 of 73
FACILITY NO. NONE

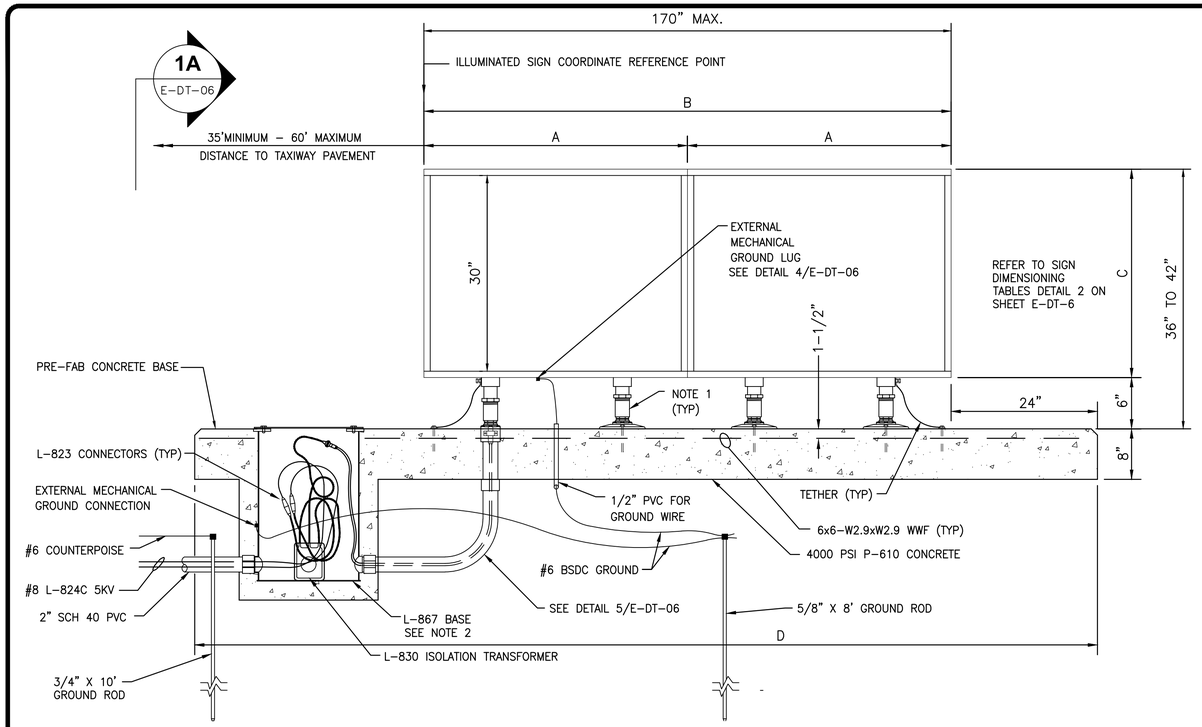

1 E-DT-06 TYPICAL AIRFIELD NEW SIGN INSTALLATION DETAIL
N.T.S.

NOTES:

1. L-867 BASE, 16" DIA, 24" DEEP WITH FOUR 2" THREADED HUBS, 3/8" COVER PLATE, INCLUDING NEOPRENE GASKET AND STAINLESS STEEL HARDWARE. STUB OUT AND CAP UNUSED CONDUITS. SEE LAYOUT PLAN SHEETS FOR ORIENTATION OF CONDUIT(S) USED.
2. FRANGIBLE COUPLING, EMT NIPPLE, FLOOR FLANGE, AND STAINLESS STEEL ANCHOR BOLTS SHALL BE PROVIDED AS REQUIRED.
3. INSTALL TWO GROUND RODS AT EACH SIGN ARRAY. ONE 3/4" X 10' FOR COUNTERPOISE AND ONE 5/8" X 8' FOR GROUNDING.
4. SIGN IDENTIFICATION NAMEPLATE SHALL BE AFFIXED ON BOTH ENDS OF EACH SIGN ARRAY. NAMEPLATE SHALL SHOW: TYPE, SIZE, STYLE, CLASS, MANUFACTURERS, NAME AND ADDRESS, DATE OF MANUFACTURE, CATALOG NUMBER, LAMP DATA, TOTAL MAXIMUM VA LOAD AND POWER FACTOR; AS A MINIMUM. NAMEPLATE SHALL CONFORM TO REQUIREMENTS OF AC 150/5345-44.
5. L-867 BASE SHALL BE LOCATED AT END NEAREST TO PAVEMENT.
6. EXTENDER CABLE SHALL BE LONG ENOUGH TO EXTEND 3' OUT OF THE L-867B CAN.
7. CONTRACTOR SHALL GRADE AROUND SIGNS AS NECESSARY TO PREVENT SILT/DIRT INFILTRATION ONTO SIGN FOUNDATION AND MAINTAIN 1" MAX DIMENSION AROUND SIGN FOUNDATION. NO SEPARATE PAYMENT SHALL BE MADE.
8. PROVIDE 2" DIA. SIGN CIRCUIT IDENTIFICATION MARKER BRONZE.
9. FURNISH SIGNS WITH ONE TETHER PER MODULE. TETHERS SHALL BE 3/16" STAINLESS STEEL AIRCRAFT CABLE WITH A FORMED EYE ON BOTH ENDS. THE TETHER EYE SHALL BE ATTACHED TO THE SIGN IN ACCORDANCE WITH THE MANUFACTURERS RECOMMENDATIONS AND TO THE CONCRETE BASE BETWEEN TWO STAINLESS STEEL WASHERS, WITH A 1/2 – 13 X 6" MINIMUM STAINLESS STEEL ANCHOR BOLT. THE TETHER SHALL BE OF SUFFICIENT LENGTH TO HAVE A MINIMUM OF 6" OF SLACK WHEN ATTACHED BETWEEN THE SIGN AND THE SIGN FOUNDATION. THE TETHERS AND BONDING CONDUCTORS SHALL BE OF SUFFICIENT LENGTH TO ALLOW THE FRANGIBLE COUPLINGS TO OPERATE WITHOUT RESTRICTIONS AND TO ALLOW THE POWER CABLE TO DISCONNECT IF THE SIGN FALLS OVER. THE SIGN ANCHOR BOLTS SHALL NOT BE USED FOR THE TETHER ANCHOR IN ADDITION TO INSTALLING ONE TETHER PER MODULE A SIGN ARRAY SHALL BE EQUIPPED WITH A TETHER ON EACH END. ONE MODULE SIGNS SHALL BE EQUIPPED WITH TWO TETHERS.
10. PROVIDE SIGN WITH EXTERNAL POWER DISCONNECT (ON/OFF) SWITCH TO ISOLATE THE SIGN FROM THE CIRCUIT FOR MAINTENANCE.

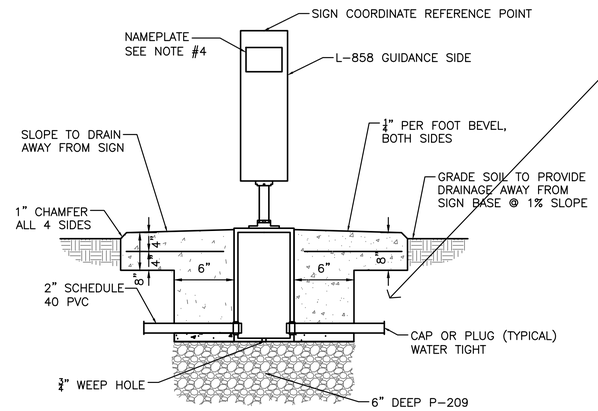

1A E-DT-06 SIGN BASE SECTION A–A
N.T.S.

NOTE:
PRE-FAB FOUNDATIONS INSTALLED FOR THE AIRFIELD SIGNAGE REPLACEMENT PROJECT ARE 7' WIDE AND HAVE 3' ON EACH END OF THE SIGN TO THE EDGE.

AIRFIELD SIGNAGE REPLACEMENT PROJECT MADE A SEPARATE SECTION FOR THE SIGN CAN AND POURED THE FOUNDATION FULL DEPTH ACROSS THE TOTAL WIDTH

L-858 Y, R, AND L (GUIDANCE SIGNS) SIZE 3, STYLE 5, CLASS 1				
SIGN MODULE	DIMENSIONS (INCHES)			
	A	B	C	D
1	42.0	42.0	31.3	102.0
2	41.8	83.6	31.3	143.6
3	41.8	125.4	31.3	185.4
4	41.8	167.2	31.3	227.2

NOTE: DIMENSIONS SHOWN ARE BASED ON STANDARD SIGNS. CONTRACTOR IS RESPONSIBLE FOR DIMENSIONS BASED ON SIGNS SUBMITTED.

2 E-DT-06 SIGN DIMENSIONING TABLES
N.T.S.

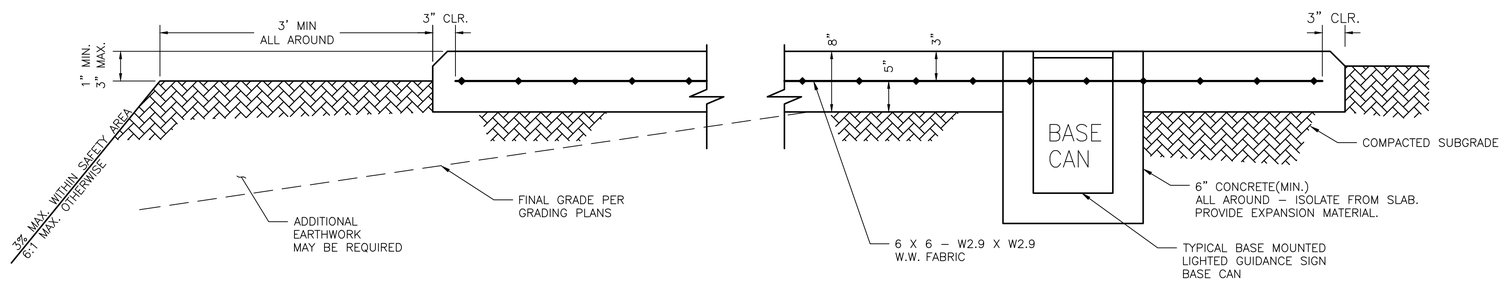

3 E-DT-06 AIRFIELD SIGN FOUNDATION DETAIL
N.T.S.

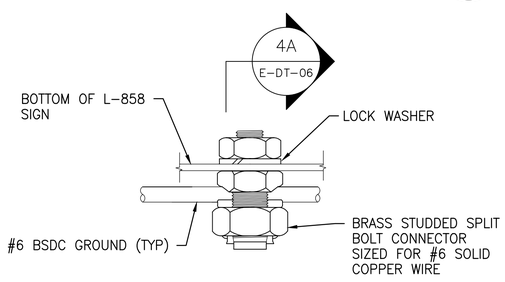

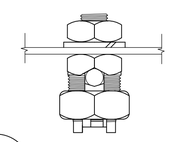

4A E-DT-06 SECTION
N.T.S.

NOTE: FACTORY WELDED #6 MINIMUM GROUND PIGTAIL MAY BE UTILIZED WITH SPLIT BOLT CONNECTOR SPLICE IN LIEU OF DETAIL SHOWN.

4 E-DT-06 GROUND LUG DETAIL
N.T.S.

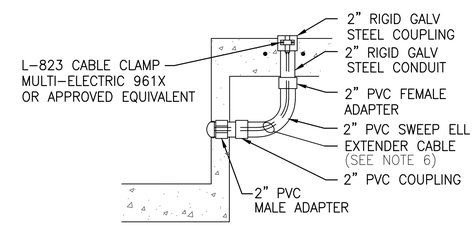

5 E-DT-06 POWER LEG DETAIL
N.T.S.

MEMPHIS - SHELBY COUNTY AIRPORT AUTHORITY
MEMPHIS INTERNATIONAL AIRPORT
2491 WINCHESTER RD. SUITE 113
MEMPHIS, TENNESSEE
38116-3856

PROGRAM MANAGER
PARSONS
Program Management Consultant
Parsons Transportation Group Inc.
Project Office:
4225 Airways Blvd.
Memphis TN, 38116
JOB NO.

Allen&Hoshall
engineers-architects-surveyors
1661 INTERNATIONAL DRIVE
SUITE 100
MEMPHIS, TENNESSEE 38120
PHONE: 901-820-0820
FAX: 901-683-1001
JOB NO. 72198-B

ENGINEER-SUBCONSULTANT
POWERS HILL DESIGN
CIVIL ENGINEERING. CIVIL RESPONSIBILITY.
80 Monroe Avenue
Suite 420
Memphis, TN 38103
Tel: 901.543.8000
JOB NO.

DRAWN BY: ELA
CHECKED BY:
APPROVED BY:

MICHAEL S. COLLINS Registered Engineer No. 104198 STATE OF TENNESSEE 3-17-25

ISSUED FOR BID

NO.	DESCRIPTION	DATE	BY

REVISIONS

PROJECT:
TAXIWAY BRAVO RECONFIGURATION (HOT SPOT 1)

SHEET TITLE:
SIGNAGE INSTALLATION DETAILS

MSCAA NO. 18-1413-02
DWG. FILE NAME E-DT-06.DWG
DATE 03/17/2025
DWG NO. E-DT-06
SCALE N.T.S.
SHEET NO. 64 of 73
FACILITY NO. NONE

Drawing name: \\AHMEMO3\72198-b\18-1413-02\DRAWINGS\E-DT-06.dwg 22x34 Mar 21, 2025 3:53pm by: jbarton

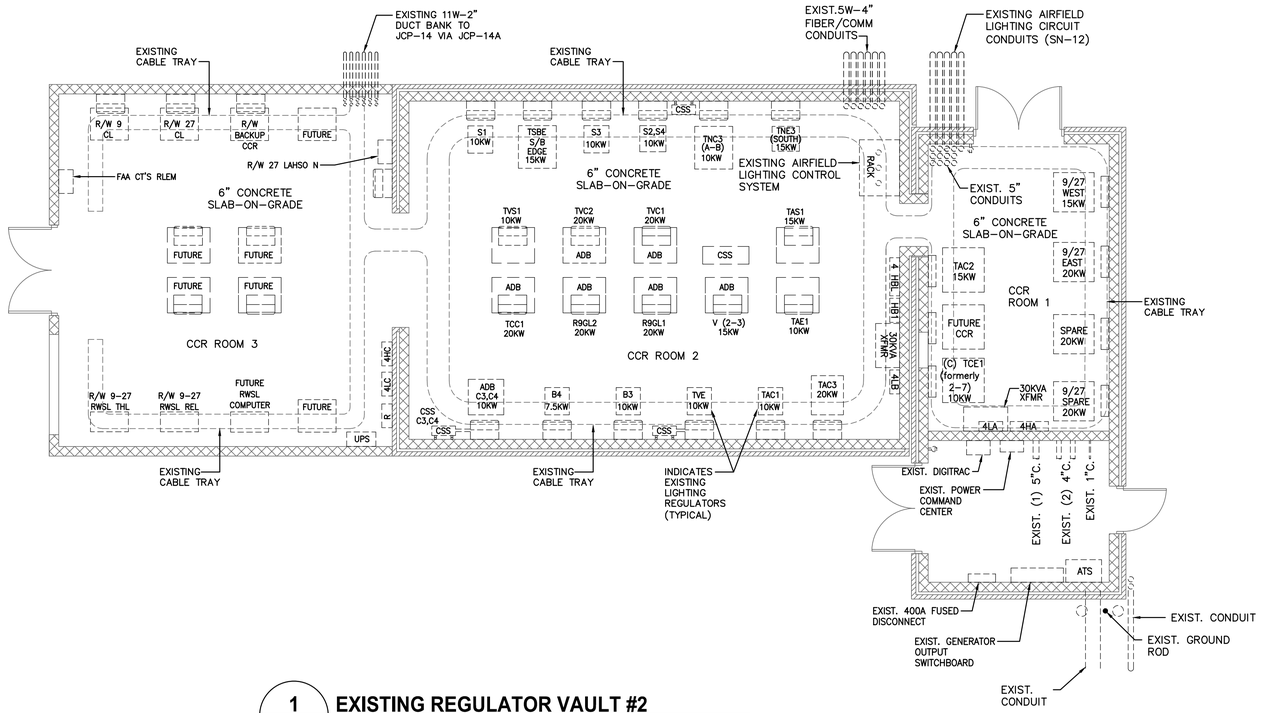

1 E-DT-14 **EXISTING REGULATOR VAULT #2**
SCALE: 3/16"=1'-0"

NOTES:

1. COORDINATE WITH MSCAA MAINTENANCE BEFORE DENERGIZING ANY REGULATOR TO PERFORM WORK IN THIS PROJECT.

MEMPHIS - SHELBY COUNTY AIRPORT AUTHORITY

MEMPHIS INTERNATIONAL AIRPORT
2491 WINCHESTER RD. SUITE 113
MEMPHIS, TENNESSEE
38116-3856

PROGRAM MANAGER
PARSONS
Program Management Consultant
Parsons Transportation Group Inc.
Project Office:
4225 Airways Blvd.
Memphis TN, 38116
JOB NO.

Allen&Hoshall
engineers-architects-surveyors
1661 INTERNATIONAL DRIVE
SUITE 100
MEMPHIS, TENNESSEE 38120
PHONE: 901-820-0820
FAX: 901-683-1001
JOB NO. 72198-B

ENGINEER-SUBCONSULTANT
POWERS HILL DESIGN
CIVIL ENGINEERING. CIVIL RESPONSIBILITY.
80 Monroe Avenue
Suite 420
Memphis, TN 38103
Tel: 901.543.8000
JOB NO.

DRAWN BY: ELA
CHECKED BY:
APPROVED BY:

MICHAEL S. COLLINS Registered Engineer No. 114198 STATE OF TENNESSEE
3-17-25

ISSUED FOR BID

NO.	DESCRIPTION	DATE	BY

REVISIONS

PROJECT:
TAXIWAY BRAVO RECONFIGURATION (HOT SPOT 1)

SHEET TITLE:
EXISTING REGULATOR VAULT #2

MSCAA NO. 18-1413-02
DWG. FILE NAME E-DT-07.DWG
DATE 03/17/2025
DWG NO. E-DT-07
SCALE N.T.S.
SHEET NO. 65 of 73
FACILITY NO. NONE

Drawing name: \\AHMEMO3\72198-b\18-1413-02\DRAWINGS\E-DT-07.dwg 22x34 Mar 21, 2025 3:54pm by: jbarton

LIGHTING ID SCHEDULE

CIRCUIT	FIXTURE ID NUMBER	NORTHING	EASTING	FIXTURE	FILTER COLOR	NOTE
S-1	100	286804.88	779112.51	L-852C UNI	Y	
	100	286804.88	779107.51	L-852C UNI	Y	
	100	286804.88	779102.51	L-852C UNI	Y	
	101	286598.21	779102.73	L-852D BI	G/G	
	102	286723.35	779099.86	L-852D BI	G/G	
	103	286700.93	779093.29	L-852D BI	G/G	
	104	286680.97	779081.15	L-852D BI	G/G	
	105	286664.84	779064.25	L-852D BI	G/G	
	106	286653.63	779043.75	L-852D BI	G/G	
	107	286648.10	779021.05	L-852D BI	G/G	
S-2	100	286690.16	779104.86	L-852D BI	G/G	
	101	286735.01	779100.90	L-852D BI	G/G	
	102	286711.93	779097.31	L-852D BI	G/G	
	103	286690.55	779087.87	L-852D BI	G/G	
	104	286672.35	779073.23	L-852D BI	G/G	
	105	286658.56	779054.36	L-852D BI	G/G	
	106	286650.12	779032.58	L-852D BI	G/G	
	107	286647.61	779009.35	L-852D BI	G/G	
TAC1	74	287431.66	779548.55	L-852C UNI	Y	
	74	287426.67	779548.18	L-852C UNI	Y	
	74	287421.69	779547.80	L-852C UNI	Y	
B3	1	287431.30	779486.36	L-852D BI	G/G	
	2	287430.15	779463.42	L-852D BI	G/G	
	3	287423.40	779441.48	L-852D BI	G/G	
	4	287411.44	779421.87	L-852D BI	G/G	
	5	287395.02	779405.81	L-852D BI	G/G	
	6	287375.15	779394.29	L-852D BI	G/G	
	7	287353.06	779388.03	L-852D BI	G/G	
	8	287445.04	779294.06	L-852D BI	G/G	
	9	287438.33	779316.35	L-852D BI	G/G	
	10	287426.99	779336.67	L-852D BI	G/G	
	11	287411.53	779354.08	L-852D BI	G/G	
	12	287392.69	779367.74	L-852D BI	G/G	
	13	287371.36	779377.04	L-852D BI	G/G	
	14	287348.52	779381.52	L-852D BI	G/G	
	15	287290.10	779380.80	L-852C BI	G/G	
	16	287278.64	779385.48	L-852C UNI	Y	
	16	287278.76	779380.48	L-852C UNI	Y	
	16	287278.87	779375.48	L-852C UNI	Y	
	17	287196.55	779378.64	L-852C BI	G/G	
	18	287103.01	779376.48	L-852C BI	G/G	
	19	287009.46	779374.31	L-852C BI	G/G	
	20	286915.92	779372.15	L-852C BI	G/G	
	21	286822.38	779369.99	L-852C BI	G/G	
	22	286728.83	779367.83	L-852C BI	G/G	
	23	286705.74	779364.24	L-852C BI	G/G	
	24	286684.37	779354.80	L-852C BI	G/G	
	25	286666.17	779340.15	L-852C BI	G/G	
	26	286652.38	779321.29	L-852C BI	G/G	
	27	286643.94	779299.51	L-852C BI	G/G	
	28	286641.43	779276.28	L-852C BI	G/G	
	29	286636.73	779263.28	L-852C UNI	Y	
	29	286641.73	779263.28	L-852C UNI	Y	
	29	286646.73	779263.28	L-852C UNI	Y	
	30	286644.44	779146.06	L-852C BI	G/G	
	31	286646.57	779054.09	L-852C BI	G/G	
	32	286649.27	778937.51	L-852C BI	G/G	
	33	286638.35	779193.19	L-852D BI	G/G	
	34	286635.84	779169.97	L-852D BI	G/G	
	35	286627.41	779148.19	L-852D BI	G/G	
	36	286613.63	779129.33	L-852D BI	G/G	
	37	286595.44	779114.68	L-852D BI	G/G	
	38	286574.08	779105.24	L-852D BI	G/G	
	39	286551.01	779101.64	L-852D BI	G/G	
	40	286644.42	779181.42	L-852D BI	G/G	
	41	286651.22	779158.61	L-852D BI	G/G	
	42	286663.80	779138.40	L-852D BI	G/G	
	43	286681.26	779122.22	L-852D BI	G/G	

LIGHTING ID SCHEDULE

CIRCUIT	FIXTURE ID NUMBER	NORTHING	EASTING	FIXTURE	FILTER COLOR	NOTE
B-3	44	286702.37	779111.21	L-852D BI	G/G	
	45	286725.63	779106.16	L-852D BI	G/G	
B-4	1	287431.44	779474.86	L-852D BI	G/G	
	2	287427.46	779452.24	L-852D BI	G/G	
	3	287418.03	779431.30	L-852D BI	G/G	
	4	287403.73	779413.33	L-852D BI	G/G	
	5	287385.44	779399.43	L-852D BI	G/G	
	6	287364.30	779390.47	L-852D BI	G/G	
	7	287341.60	779387.00	L-852D BI	G/G	
	8	287442.29	779305.39	L-852D BI	G/G	
	9	287433.21	779326.82	L-852D BI	G/G	
	10	287419.73	779345.79	L-852D BI	G/G	
	11	287402.48	779361.42	L-852D BI	G/G	
	12	287382.28	779372.97	L-852D BI	G/G	
	13	287360.06	779379.90	L-852D BI	G/G	
	14	287336.87	779381.88	L-852D BI	G/G	
	16	287243.32	779379.72	L-852C BI	G/G	
	17	287149.78	779377.56	L-852C BI	G/G	
	18	287056.24	779375.40	L-852C BI	G/G	
	19	286962.69	779373.23	L-852C BI	G/G	
	20	286869.15	779371.07	L-852C BI	G/G	
	21	286775.60	779368.91	L-852C BI	G/G	
	22	286717.17	779366.79	L-852C BI	G/G	
	23	286694.75	779360.22	L-852C BI	G/G	
	24	286674.79	779348.07	L-852C BI	G/G	
	25	286658.66	779331.18	L-852C BI	G/G	
	26	286647.45	779310.68	L-852C BI	G/G	
	27	286641.92	779287.97	L-852C BI	G/G	
	29	286642.39	779234.79	L-852C BI	G/G	
	30	286645.42	779103.82	L-852F OMNI	Y	
	31	286648.44	778973.43	L-852C BI	G/G	
	32	286650.10	778901.59	L-852C BI	G/G	
	33	286637.86	779181.49	L-852D BI	G/G	
	34	286632.34	779158.80	L-852D BI	G/G	
	35	286621.14	779138.31	L-852D BI	G/G	
	36	286605.02	779121.41	L-852D BI	G/G	
	37	286585.07	779109.26	L-852D BI	G/G	
	38	286562.66	779102.68	L-852D BI	G/G	
	39	286643.35	779193.30	L-852D BI	G/G	
	40	286647.06	779169.79	L-852D BI	G/G	
	41	286656.84	779148.08	L-852D BI	G/G	
	42	286671.99	779129.73	L-852D BI	G/G	
	43	286691.45	779116.01	L-852D BI	G/G	
	44	286713.83	779107.91	L-852D BI	G/G	
	45	286737.56	779106.00	L-852D BI	G/G	
R18CSB1	1	286549.84	778983.87	L-852S	R	
	2	286559.67	778984.08	L-852S	R	
	3	286569.50	778984.30	L-852S	R	
	4	286579.33	778984.52	L-852S	R	
	5	286589.16	778984.73	L-852S	R	
	6	286598.99	778984.95	L-852S	R	
	7	286608.82	778985.17	L-852S	R	
	8	286618.65	778985.39	L-852S	R	
	9	286628.49	778985.60	L-852S	R	
	10	286638.32	778985.82	L-852S	R	
	11	286648.15	778986.04	L-852S	R	
	12	286657.98	778986.26	L-852S	R	
	13	286667.81	778986.47	L-852S	R	
	14	286677.64	778986.69	L-852S	R	
	15	286687.47	778986.91	L-852S	R	
	16	286697.30	778987.13	L-852S	R	
	17	286707.13	778987.34	L-852S	R	
	18	286716.96	778987.56	L-852S	R	
	19	286726.79	778987.78	L-852S	R	
	20	286736.63	778988.00	L-852S	R	
TSBE	1	287367.29	779662.17	L-852T	B	
	2	287365.17	779620.31	L-852T	B	
	3	287363.07	779578.44	L-852T	B	

LIGHTING ID SCHEDULE

CIRCUIT	FIXTURE ID NUMBER	NORTHING	EASTING	FIXTURE	FILTER COLOR	NOTE
TSBE	4	287360.97	779536.58	L-852T	B	
	5	287349.74	779497.34	L-852T	B	
	6	287322.32	779467.09	L-852T	B	
	7	287370.54	779262.66	L-852T	B	
	8	287360.20	779285.63	L-852T	B	
	9	287334.51	779304.96	L-852T	B	
	20	287376.80	779590.24	BLANK	BLANK	
	21	287381.83	779456.69	BLANK	BLANK	
	22	287386.51	779323.12	BLANK	BLANK	
	23	287381.40	779295.59	BLANK	BLANK	
	24	287376.29	779268.05	BLANK	BLANK	
	25	287364.96	779238.10	L-852T	B	
	100	287284.36	779452.07	L-852T	B	
	101	287242.73	779445.87	L-852T	B	
	102	287201.11	779439.66	L-852T	B	
	103	287159.48	779433.46	L-852T	B	
	104	287033.37	779427.71	L-852T	B	
	105	286907.26	779421.97	L-852T	B	
	106	286832.65	779420.24	L-852T	B	
	107	286782.67	779419.08	L-852T	B	
	108	286727.68	779417.81	L-852T	B	
	109	286685.91	779410.39	L-852T	B	
	110	286648.31	779390.77	L-852T	B	
	111	286618.34	779360.75	L-852T	B	
	112	286598.78	779323.11	L-852T	B	
	113	286582.51	779275.08	L-852T	B	
	114	286566.24	779227.05	L-852T	B	
	115	286538.76	779186.91	L-852T	B	
	116	286494.41	779166.93	L-852T	B	
	117	286453.00	779160.68	L-852T	B	
	118	286411.59	779154.44	L-852T	B	
	119	286370.18	779148.20	L-852T	B	
	120	286322.28	779146.00	L-852T	B	
	121	286273.36	779143.71	L-852T	B	
	122	286224.44	779141.41	L-852T	B	
	123	286175.52	779139.12	L-852T	B	
	124	286126.59	779136.82	L-852T	B	
	125	287302.81	779314.11	L-852T	B	
	126	287261.98	779318.47	L-852T	B	
	127	287220.30	779322.92	L-852T	B	
	128	287178.61	779327.37	L-852T	B	
	129	287035.72	779324.13	L-852T	B	
	130	286909.59	779321.27	L-852T	B	
	131	286868.18	779315.02	L-852T	B	
	132	286826.77	779308.78	L-852T	B	
	133	286785.36	779302.54	L-852T	B	
	134	286747.11	779287.23	L-852T	B	
	135	286719.68	779256.47	L-852T	B	
	136	286714.85	779236.47	L-852T	B	
	137	286720.60	779216.71	L-852T	B	
	138	286749.13	779187.44	L-852T	B	
	139	286787.65	779173.81	L-852T	B	
	140	286830.00	779169.41	L-852T	B	
	141	286871.66	779165.09	L-852T	B	
	142	286913.55	779160.82	L-852T	B	
	143	286982.14	779160.78	L-852T	B	
	144	287050.74	779160.74	L-852T	B	
	145	286984.56	779049.71	L-852T	B	
	146	286915.93	779047.44	L-852T	B	
	147	286867.64	779038.52	L-852T	B	
	148	286819.03	779029.55	L-852T	B	
	149	286782.46	779015.39	L-852T	B	
	150	286755.38	778987.03	L-852T	B	
	151	286742.93	778949.84	L-852T	B	
	152	286738.61	778908.19	L-852T	B	
	153	286734.29	778866.53	L-852T	B	
	154	286729.97	778824.88	L-852T	B	

SCHEDULE NOTES

1. IF, DURING LAYOUT OF LIGHTING BY TABULATED COORDINATES, THE CONTRACTOR OR INSPECTOR NOTICES ANY IRREGULARITY, PLEASE CONTACT US IMMEDIATELY SO THAT WE MAY CHECK THE PARTICULAR LOCATION AGAIN.
2. SEE LIGHTING LAYOUT PLAN SHEETS E-LT-01 AND E-LT-02 FOR FIXTURE LOCATIONS.
3. LOCATION OF THE REFERENCE POINT COORDINATE IS THE GEOMETRIC CENTER OF THE LIGHT BASE OR JUNCTION CAN.
4. FURNISH AND INSTALL THE IDENTIFIED FIXTURE AND TRANSFORMER ON NEW LIGHT BASE. SEE SPECIFICATION L-125 FOR CORRESPONDING LIGHT BASE AND TRANSFORMER REQUIREMENTS.
5. SEE E-LT-00 FOR LIGHT FIXTURE SCHEDULE.
6. CONTRACTOR SHALL GRADE AROUND JUNCTION CANS AND PULLBOX OR MANHOLE, AS REQUIRED TO PREVENT SILT/DIRT INFILTRATION ONTO STRUCTURE. GRADING IS INCIDENTAL TO STRUCTURE INSTALLATION. NO SEPARATE PAYMENT SHALL BE MADE.
7. NOT USED.
8. L-868B TWO-PIECE BASE WITH 1-3/8" FLANGE RING AND 3/4" MULTIHOLE ADAPTER RING FURNISHED AND INSTALLED IN NEW RIGID PAVEMENT (REFERENCE PAY ITEM L-125-5.9-1).
9. L-868B TWO-PIECE BASE WITH 1-3/8" FLANGE RING AND 3/4" MULTIHOLE ADAPTER RING FURNISHED AND INSTALLED IN NEW FLEXIBLE PAVEMENT (REFERENCE PAY ITEM L-125-5.9-2).
10. REMOVE EDGE LIGHT FIXTURE AND INSTALL L-867 BLANK LID.
11. REMOVE CENTERLINE LIGHT FIXTURE AND INSTALL LED CENTERLINE LIGHT FIXTURE ON EXISTING BASE.
12. REPLACE EXISTING ELECTRICAL STRUCTURE WITH AIRCRAFT-RATED PULLBOX. SEE DETAIL 1 ON SHEET E-DT-05. NO SEPARATE PAYMENT SHALL BE MADE FOR REQUIRED SCOPE TO PROTECT EXISTING CIRCUITS. PROTECTION SHALL INCLUDE PULLING BACK EXISTING CIRCUIT CONDUCTORS TO NEAREST STRUCTURE AND REPULLING/RECONNECTING TO REESTABLISH CIRCUITS UPON COMPLETION OF PULLBOX INSTALLATION.
13. INSTALL AIRCRAFT-RATED PULLBOX. SEE DETAIL 1 ON SHEET E-DT-05.
14. INSTALL BLANK LID.

* LIGHT BASE MOVED TO AVOID CONFLICT WITH PCCP JOINT. LIGHTING LAYOUT DIMENSIONS DO NOT APPLY.

** LIGHT BASE IS WITHIN 2' FROM PCCP JOINT. REQUIRES PAVEMENT BLOCKOUT. SEE E-DT-04

MEMPHIS - SHELBY COUNTY AIRPORT AUTHORITY
MEMPHIS INTERNATIONAL AIRPORT
2491 WINCHESTER RD. SUITE 113
MEMPHIS, TENNESSEE
38116-3856

PROGRAM MANAGER
PARSONS
Program Management Consultant
Parsons Transportation Group Inc.
Project Office:
4225 Airways Blvd.
Memphis TN, 38116
JOB NO.

Allen&Hoshall
engineers-architects-surveyors
1661 INTERNATIONAL DRIVE
SUITE 100
MEMPHIS, TENNESSEE 38120
PHONE: 901-820-0820
FAX: 901-683-1001
JOB NO. 72198-B

ENGINEER-SUBCONSULTANT
POWERS HILL DESIGN
CIVIL ENGINEERING. CIVIL RESPONSIBILITY.
80 Monroe Avenue
Suite 420
Memphis, TN 38103
Tel: 901.543.8000
JOB NO.

DRAWN BY:
CHECKED BY:
APPROVED BY:

MICHAEL S. COLLINS
REGISTERED ENGINEER
No. 104198
STATE OF TENNESSEE
3-17-25

ISSUED FOR BID

NO.	DESCRIPTION	DATE	BY

REVISIONS

PROJECT:
TAXIWAY BRAVO RECONFIGURATION (HOT SPOT 1)

SHEET TITLE:
LIGHTING COORDINATE TABLE SHEET 2 OF 2

MSCAA NO. 18-1413-02
DWG. FILE NAME E-DT-08.DWG
DATE 03/17/2025
DWG NO. E-DT-09
SCALE N.T.S.
SHEET NO. 66 of 73
FACILITY NO. NONE

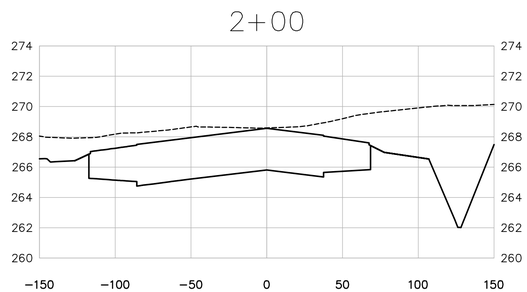

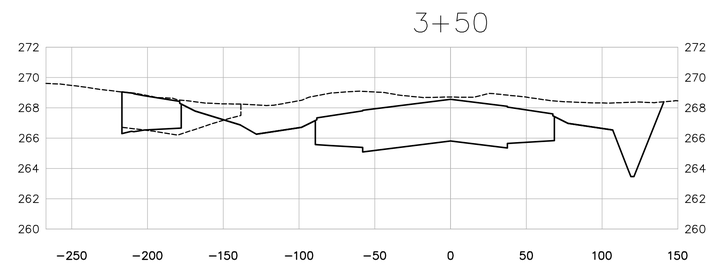

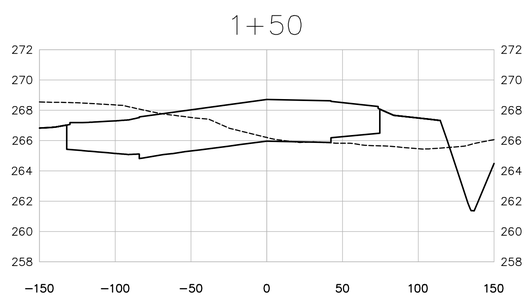

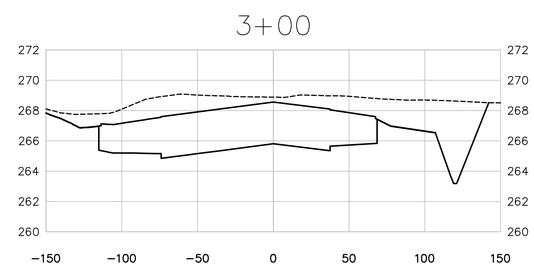

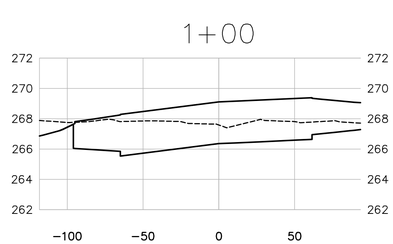

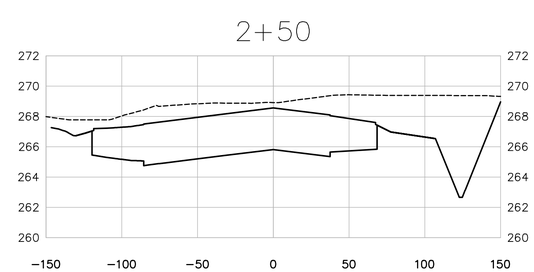

0' 25' 50' 100'
FULL SIZE SCALE: 1"=50'
HALF SIZE SCALE: 1"=100'

VERTICAL
0' 5' 10'
FULL SIZE SCALE: 1"=5'
HALF SIZE SCALE: 1"=10'

Drawing name: \\Ahmem03\72198-b\18-1413-02\DRAWINGS\C-XS-01.dwg 22x34 May 28, 2025 10:55am by: nparris

MEMPHIS - SHELBY COUNTY AIRPORT AUTHORITY

MEMPHIS INTERNATIONAL AIRPORT
2491 WINCHESTER RD. SUITE 113
MEMPHIS, TENNESSEE
38116-3856

PROGRAM MANAGER
PARSONS
Program Management Consultant
Parsons Transportation Group Inc.
Project Office:
4225 Airways Blvd.
Memphis TN, 38116
JOB NO.

Allen&Hoshall
engineers-architects-surveyors
1661 INTERNATIONAL DRIVE
SUITE 100
MEMPHIS, TENNESSEE 38120
PHONE: 901-820-0820
FAX: 901-683-1001
JOB NO. 72198-B

ENGINEER-SUBCONSULTANT
POWERS HILL DESIGN
CIVIL ENGINEERING. CIVIL RESPONSIBILITY.
80 Monroe Avenue
Suite 420
Memphis, TN 38103
Tel: 901.543.8000
JOB NO.

DRAWN BY: RNP
CHECKED BY: HP
APPROVED BY: TG

WILLIAM T. GIBSON
REGISTERED ENGINEER
AGRICULTURE
No. 104251
STATE OF TENNESSEE
3/13/

ISSUED FOR BID

NO.	DESCRIPTION	DATE	BY

REVISIONS

PROJECT:
TAXIWAY BRAVO RECONFIGURATION (HOT SPOT 1)

SHEET TITLE:
TAXIWAY B CROSS SECTIONS STA. 1+00 TO STA. 3+50

MSCAA NO. 18-1413-02
DWG. FILE NAME C-XS-01.DWG
DATE 03/17/2025
DWG NO. C-XS-01
SCALE AS SHOWN
SHEET NO. 67 of 73
FACILITY NO. NONE

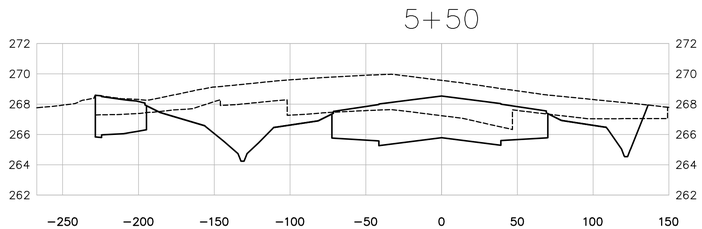

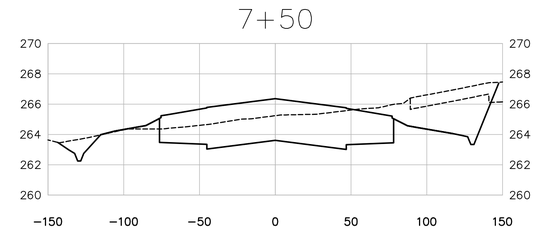

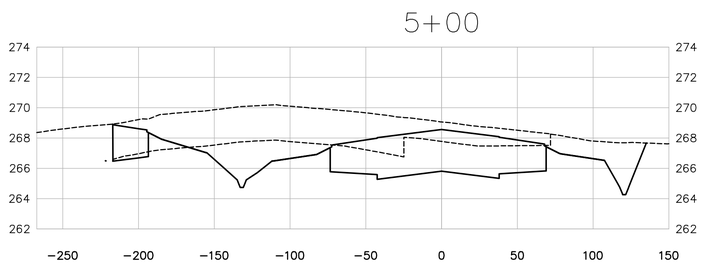

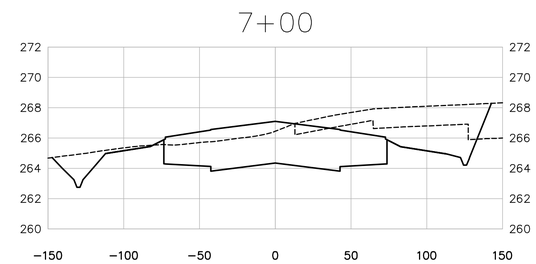

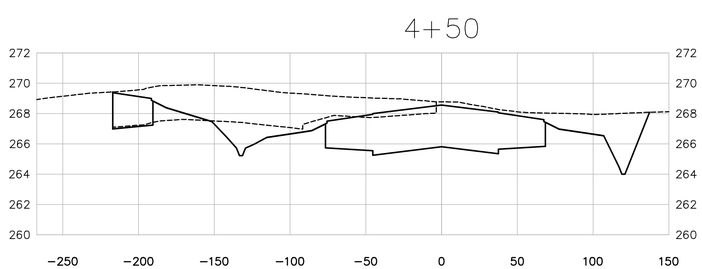

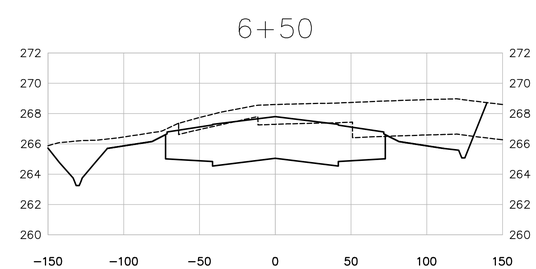

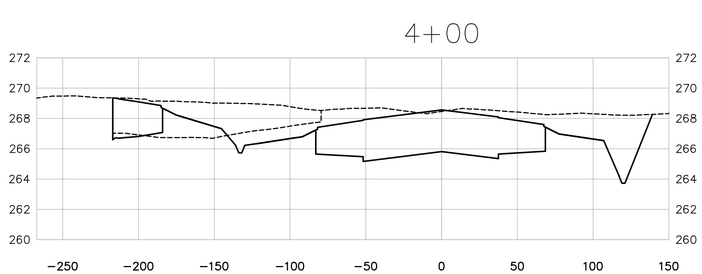

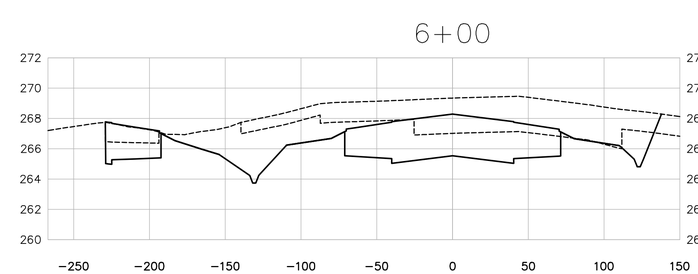

0' 25' 50' 100'
FULL SIZE SCALE: 1"=50'
HALF SIZE SCALE: 1"=100'

VERTICAL
0' 5' 10'
FULL SIZE SCALE: 1"=5'
HALF SIZE SCALE: 1"=10'

MEMPHIS - SHELBY COUNTY AIRPORT AUTHORITY

MEMPHIS INTERNATIONAL AIRPORT
2491 WINCHESTER RD. SUITE 113
MEMPHIS, TENNESSEE
38116-3856

PROGRAM MANAGER
PARSONS
Program Management Consultant
Parsons Transportation Group Inc.
Project Office:
4225 Airways Blvd.
Memphis TN, 38116
JOB NO.

Allen&Hoshall
engineers-architects-surveyors
1661 INTERNATIONAL DRIVE
SUITE 100
MEMPHIS, TENNESSEE 38120
PHONE: 901-820-0820
FAX: 901-683-1001
JOB NO. 72198-B

ENGINEER-SUBCONSULTANT
POWERS HILL DESIGN
CIVIL ENGINEERING. CIVIL RESPONSIBILITY.
80 Monroe Avenue
Suite 420
Memphis, TN 38103
Tel: 901.543.8000
JOB NO.

DRAWN BY: RNP
CHECKED BY: HP
APPROVED BY: TG

WILLIAM T. GIBSON
REGISTERED ENGINEER
AGRICULTURE
No. 104251
STATE OF TENNESSEE
3/13/

ISSUED FOR BID

NO.	DESCRIPTION	DATE	BY

REVISIONS

PROJECT:
TAXIWAY BRAVO RECONFIGURATION (HOT SPOT 1)

SHEET TITLE:
TAXIWAY B CROSS SECTIONS STA. 4+00 TO STA. 7+50

MSCAA NO. 18-1413-02
DWG. FILE NAME C-XS-02.DWG
DATE 03/17/2025
DWG NO. C-XS-02
SCALE AS SHOWN
SHEET NO. 68 of 73
FACILITY NO. NONE

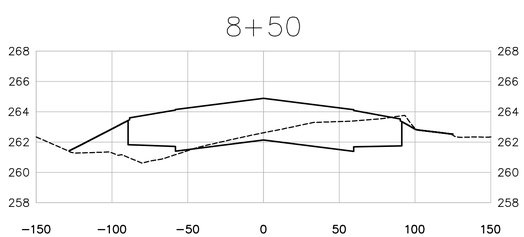

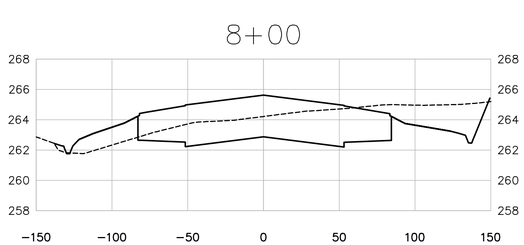

0' 25' 50' 100'
FULL SIZE SCALE: 1"=50'
HALF SIZE SCALE: 1"=100'

VERTICAL
0' 5' 10'
FULL SIZE SCALE: 1"=5'
HALF SIZE SCALE: 1"=10'

MEMPHIS - SHELBY COUNTY AIRPORT AUTHORITY
MEMPHIS INTERNATIONAL AIRPORT
2491 WINCHESTER RD. SUITE 113
MEMPHIS, TENNESSEE
38116-3856

PROGRAM MANAGER
PARSONS
Program Management Consultant
Parsons Transportation Group Inc.
Project Office:
4225 Airways Blvd.
Memphis TN, 38116
JOB NO.

Allen&Hoshall
engineers-architects-surveyors
1661 INTERNATIONAL DRIVE
SUITE 100
MEMPHIS, TENNESSEE 38120
PHONE: 901-820-0820
FAX: 901-683-1001
JOB NO. 72198-B

ENGINEER-SUBCONSULTANT
POWERS HILL DESIGN
CIVIL ENGINEERING. CIVIL RESPONSIBILITY.
80 Monroe Avenue
Suite 420
Memphis, TN 38103
Tel: 901.543.8000
JOB NO.

DRAWN BY: RNP
CHECKED BY: HP
APPROVED BY: TG

WILLIAM T. GIBSON
REGISTERED ENGINEER
AGRICULTURE
No. 104251
STATE OF TENNESSEE
3/13/25

ISSUED FOR BID

NO.	DESCRIPTION	DATE	BY

REVISIONS

PROJECT:
TAXIWAY BRAVO RECONFIGURATION (HOT SPOT 1)

SHEET TITLE:
TAXIWAY B CROSS SECTIONS STA. 8+00 TO STA. 8+50

MSCAA NO. 18-1413-02
DWG. FILE NAME C-XS-03.DWG
DATE 03/17/2025
DWG NO. C-XS-03
SCALE AS SHOWN
SHEET NO. 69 of 73
FACILITY NO. NONE

-1+50

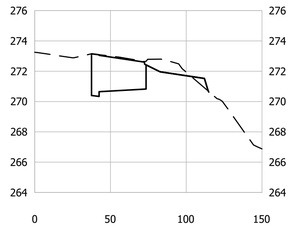

-0+00

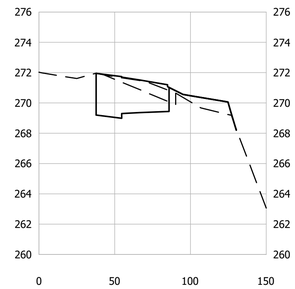

1+50

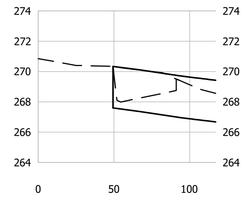

-2+00

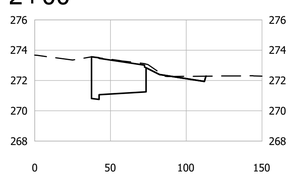

-0+50

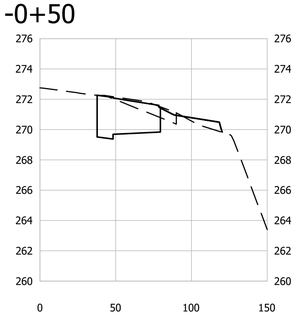

1+00

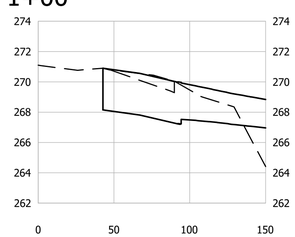

-2+50

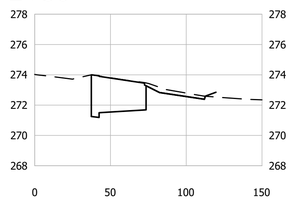

-1+00

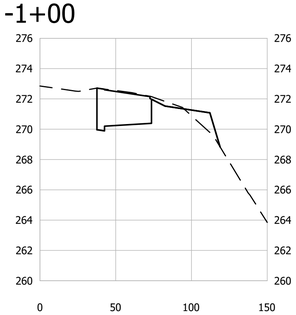

0+50

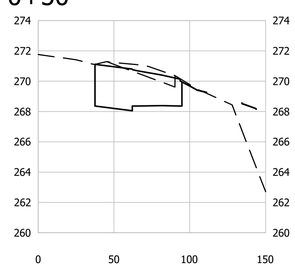

0' 25' 50' 100'
FULL SIZE SCALE: 1"=50'
HALF SIZE SCALE: 1"=100'

VERTICAL
0' 5' 10'
FULL SIZE SCALE: 1"=5'
HALF SIZE SCALE: 1"=10'

Drawing name: \\Ahmem03\72198-b\18-1413-02\DRAWINGS\C-XS-04.dwg 22x34 May 28, 2025 10:55am by: nparris

MEMPHIS - SHELBY COUNTY AIRPORT AUTHORITY

MEMPHIS INTERNATIONAL AIRPORT
2491 WINCHESTER RD. SUITE 113
MEMPHIS, TENNESSEE
38116-3856

PROGRAM MANAGER
PARSONS
Program Management Consultant
Parsons Transportation Group Inc.
Project Office:
4225 Airways Blvd.
Memphis TN, 38116
JOB NO.

Allen&Hoshall
engineers-architects-surveyors
1661 INTERNATIONAL DRIVE
SUITE 100
MEMPHIS, TENNESSEE 38120
PHONE: 901-820-0820
FAX: 901-683-1001
JOB NO. 72198-B

ENGINEER-SUBCONSULTANT
POWERS HILL DESIGN
CIVIL ENGINEERING. CIVIL RESPONSIBILITY.
80 Monroe Avenue
Suite 420
Memphis, TN 38103
Tel: 901.543.8000
JOB NO.

DRAWN BY: RNP
CHECKED BY: HP
APPROVED BY: TG

WILLIAM T. GIBSON REGISTERED ENGINEER AGRICULTURE No. 104251 STATE OF TENNESSEE
3/13/

ISSUED FOR BID

NO.	DESCRIPTION	DATE	BY

REVISIONS

PROJECT:
TAXIWAY BRAVO RECONFIGURATION (HOT SPOT 1)

SHEET TITLE:
TAXIWAY S CROSS SECTIONS STA. -2+50 TO STA. 1+50

MSCAA NO. 18-1413-02
DWG. FILE NAME C-XS-04.DWG
DATE 03/17/2025
DWG NO. C-XS-04
SCALE 1"=50'
SHEET NO. 70 of 73
FACILITY NO. NONE

3+00

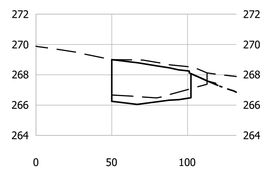

2+50

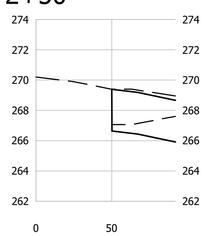

2+00

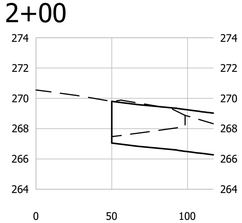

0' 25' 50' 100'
FULL SIZE SCALE: 1"=50'
HALF SIZE SCALE: 1"=100'

VERTICAL
0' 5' 10'
FULL SIZE SCALE: 1"=5'
HALF SIZE SCALE: 1"=10'

MEMPHIS - SHELBY COUNTY AIRPORT AUTHORITY

MEMPHIS INTERNATIONAL AIRPORT
2491 WINCHESTER RD. SUITE 113
MEMPHIS, TENNESSEE
38116-3856

PROGRAM MANAGER
PARSONS
Program Management Consultant
Parsons Transportation Group Inc.
Project Office:
4225 Airways Blvd.
Memphis TN, 38116
JOB NO.

Allen&Hoshall
engineers-architects-surveyors
1661 INTERNATIONAL DRIVE
SUITE 100
MEMPHIS, TENNESSEE 38120
PHONE: 901-820-0820
FAX: 901-683-1001
JOB NO. 72198-B

ENGINEER-SUBCONSULTANT
POWERS HILL DESIGN
CIVIL ENGINEERING. CIVIL RESPONSIBILITY.
80 Monroe Avenue
Suite 420
Memphis, TN 38103
Tel: 901.543.8000
JOB NO.

DRAWN BY: RNP
CHECKED BY: HP
APPROVED BY: TG

WILLIAM T. GIBSON
REGISTERED ENGINEER
AGRICULTURE
No. 104251
STATE OF TENNESSEE
3/17/25

ISSUED FOR BID

NO.	DESCRIPTION	DATE	BY

REVISIONS

PROJECT:
TAXIWAY BRAVO RECONFIGURATION (HOT SPOT 1)

SHEET TITLE:
TAXIWAY S CROSS SECTIONS STA. 2+00 TO STA. 3+00

MSCAA NO. 18-1413-02
DWG. FILE NAME C-XS-05.DWG
DATE 03/17/2025
DWG NO. C-XS-05
SCALE 1"=50'
SHEET NO. 71 of 73
FACILITY NO. NONE

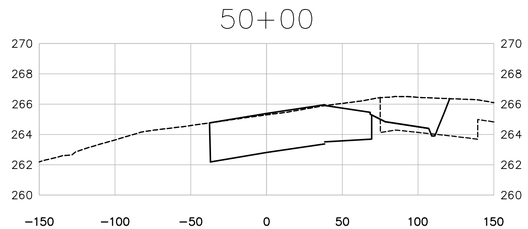

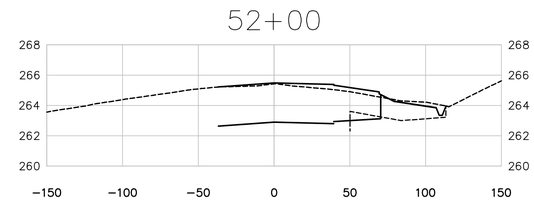

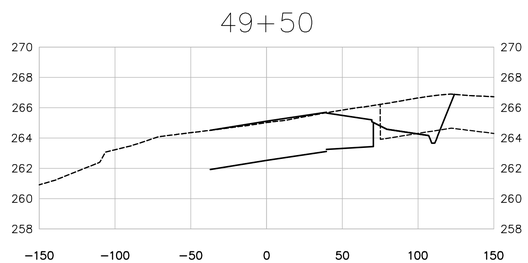

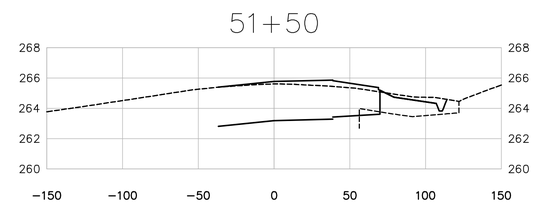

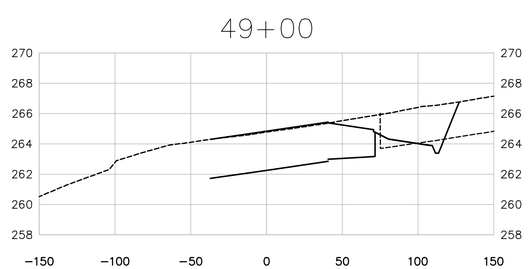

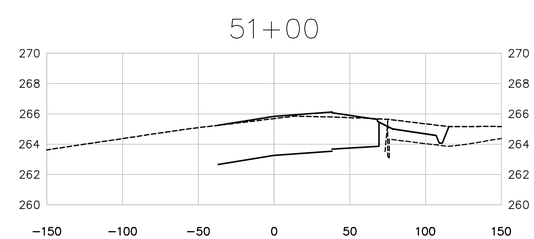

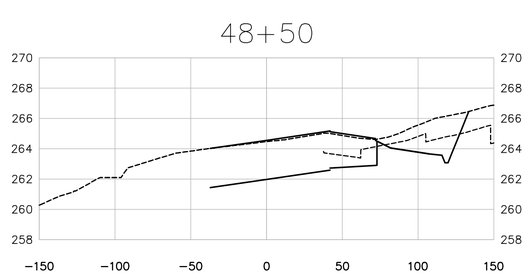

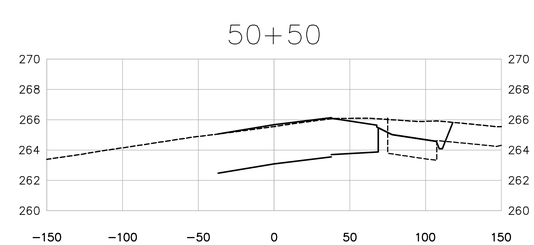

0' 25' 50' 100'
FULL SIZE SCALE: 1"=50'
HALF SIZE SCALE: 1"=100'

VERTICAL
0' 5' 10'
FULL SIZE SCALE: 1"=5'
HALF SIZE SCALE: 1"=10'

MEMPHIS - SHELBY COUNTY AIRPORT AUTHORITY
MEMPHIS INTERNATIONAL AIRPORT
2491 WINCHESTER RD. SUITE 113
MEMPHIS, TENNESSEE
38116-3856

PROGRAM MANAGER
PARSONS
Program Management Consultant
Parsons Transportation Group Inc.
Project Office:
4225 Airways Blvd.
Memphis TN, 38116
JOB NO.

Allen&Hoshall
engineers-architects-surveyors
1661 INTERNATIONAL DRIVE
SUITE 100
MEMPHIS, TENNESSEE 38120
PHONE: 901-820-0820
FAX: 901-683-1001
JOB NO. 72198-B

ENGINEER-SUBCONSULTANT
POWERS HILL DESIGN
CIVIL ENGINEERING. CIVIL RESPONSIBILITY.
80 Monroe Avenue
Suite 420
Memphis, TN 38103
Tel: 901.543.8000
JOB NO.

DRAWN BY: RNP
CHECKED BY: HP
APPROVED BY: TG

WILLIAM T. GIBSON
REGISTERED ENGINEER
AGRICULTURE
No. 104251
STATE OF TENNESSEE
3/13/25

ISSUED FOR BID

NO.	DESCRIPTION	DATE	BY

REVISIONS

PROJECT:
TAXIWAY BRAVO RECONFIGURATION (HOT SPOT 1)

SHEET TITLE:
TAXIWAY A CROSS SECTIONS STA. 48+50 TO STA. 52+00

MSCAA NO. 18-1413-02
DWG. FILE NAME C-XS-06.DWG
DATE 03/17/2025
DWG NO. C-XS-06
SCALE AS SHOWN
SHEET NO. 72 of 73
FACILITY NO. NONE

Drawing name: \\Ahmem03\72198-b\18-1413-02\DRAWINGS\C-XS-06.dwg 22x34 May 28, 2025 10:56am by: nparris

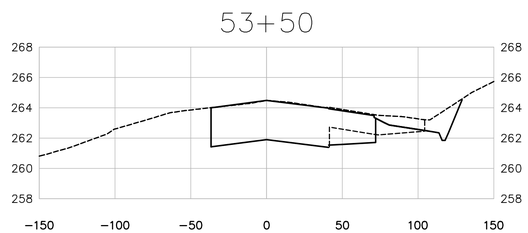

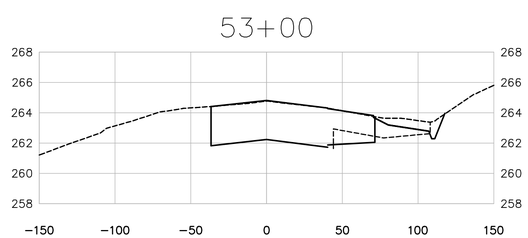

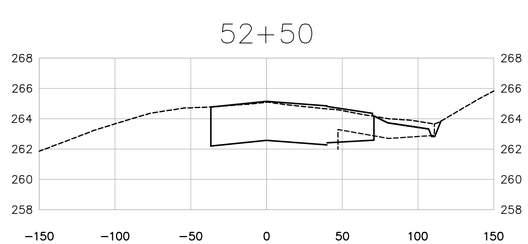

0' 25' 50' 100'
FULL SIZE SCALE: 1"=50'
HALF SIZE SCALE: 1"=100'

VERTICAL
0' 5' 10'
FULL SIZE SCALE: 1"=5'
HALF SIZE SCALE: 1"=10'

MEMPHIS - SHELBY COUNTY AIRPORT AUTHORITY

MEMPHIS INTERNATIONAL AIRPORT
2491 WINCHESTER RD. SUITE 113
MEMPHIS, TENNESSEE
38116-3856

PROGRAM MANAGER
PARSONS
Program Management Consultant
Parsons Transportation Group Inc.
Project Office:
4225 Airways Blvd.
Memphis TN, 38116
JOB NO.

Allen&Hoshall
engineers-architects-surveyors
1661 INTERNATIONAL DRIVE
SUITE 100
MEMPHIS, TENNESSEE 38120
PHONE: 901-820-0820
FAX: 901-683-1001
JOB NO. 72198-B

ENGINEER-SUBCONSULTANT
POWERS HILL DESIGN
CIVIL ENGINEERING. CIVIL RESPONSIBILITY.
80 Monroe Avenue
Suite 420
Memphis, TN 38103
Tel: 901.543.8000
JOB NO.

DRAWN BY: RNP
CHECKED BY: HP
APPROVED BY: TG

WILLIAM T. GIBSON
REGISTERED ENGINEER
AGRICULTURE
No. 104251
STATE OF TENNESSEE
3/13/25

ISSUED FOR BID

NO.	DESCRIPTION	DATE	BY

REVISIONS

PROJECT:
TAXIWAY BRAVO RECONFIGURATION (HOT SPOT 1)

SHEET TITLE:
TAXIWAY A CROSS SECTIONS STA. 52+50 TO STA. 53+50

MSCAA NO. 18-1413-02
DWG. FILE NAME C-XS-07.DWG
DATE 03/17/2025
DWG NO. C-XS-07
SCALE AS SHOWN
SHEET NO. 73 of 73
FACILITY NO. NONE